" THE MATERIAL HEREIN IS FOR INFORMATION PURPOSES ONLY AND IS SUBJECT TO CHANGE WITHOUT NOTICE. DIGITAL EQUIPMENT CORPORATION ASSUMES NO RESPONSIBILITY FOR ANY ERRORS WHICH MAY APPEAR HEREIN."

FIELD MAINTENANCE PRINT SET

" THIS DRAWING AND SPECIFICATIONS, HEREIN, ARE THE PROPERTY OF DIGITAL EQUIPMENT CORPORATION AND SHALL NOT BE REPRODUCED OR COPIED OR USED IN WHOLE OR IN PART AS THE BASIS FOR THE MANUFACTURE OR SALE OF ITEMS WITHOUT WRITTEN PERMISSION." COPYRIGHT © 1987 DIGITAL EQUIPMENT CORPORATION.

TABLE OF CONTENTS

B-TC-MS400-0-DBU	MEMORY UPGRADE
B-DD-MS400-0-DBU	MEMORY UPGRADE (DD ONLY)
K-PL-MS400-0-DBP	MEMORY UPGRADE (PL)
B-DD-5416802-0-0	2/4 MB MEMORY OPTION (DD ONLY)
D-UA-5416802-0-0	2/4 MB MEMORY OPTION
K-PL-5416802-0-DBP	2/4 MB MEMORY OPTION (PL)
K-CS-5416802-0-1	2/4 MB MEMORY OPTION

UNIT VARIATIONS COVERED BY THIS PRINT SET
MS400-AA
MS400-BA

MS400
FIELD MAINTENANCE PRINT SET

DIGITAL EQUIPMENT CORPORATION

PRINT SET PART NUMBER MP-02430-01 REV A1

FILE NAME: TC-MS400-0-DBUA

REVISION HISTORY		
REV.	ECO NUMBER	DATE
A	INITIAL	

DRN. PAUL GAGNE	DATE 05-FEB-87	
CHK'D D. HEALY	DATE 19-FEB-87	
DES. ENG. L. KIZINA	DATE 19-FEB-87	
RESP. ENG. G. LORD	DATE 19-FEB-87	
FIELD SERVICE M. RIOPEL	DATE 19-FEB-87	
TOP DOC. B-DD-MS400-0-DBU		

TITLE: digital

MEMORY UPGRADE

SIZE	CODE	NUMBER	REV.
B	TC	MS400-0-DBU	A

SHEET 1 OF 1

SIZE	CODE	NUMBER	REV.
B	TC	MS400-0-DBU	A

ML01

SIZE	CODE	NUMBER	REV.
B	DD	MS400-0-DBU	A

DRAWING NO.	NO. OF SHTS.	PART NO.	DESCRIPTION	REVISIONS
		MS400-AA	2 MB MEMORY OPTION	A1
		MS400-BA	4 MB MEMORY OPTION	A1
K-PL-MS400-0-DBP	1		MEMORY UPGRADE (PL)	A
K-SP-MS400-0-DBF	13		MS400 MEMORY MODULE	A
B-TC-MS400-0-DBU	1		MEMORY UPGRADE (TC)	A
		MP-02430-01	PRINTSET, MS400	REF
K-DD-5416802-0-0	1		4 MB MEMORY OPTION	A

NOTES:

FILE NAME: DD-MS400-0-DBUA

REVISION HISTORY		
REV.	A	
ECO NO.	INITIAL	
DATE		

THIS DRAWING AND THE SPECIFICATIONS CONTAINED HEREIN ARE CONFIDENTIAL AND PROPRIETARY. THEY ARE THE PROPERTY OF DIGITAL EQUIPMENT CORPORATION AND SHALL NOT BE REPRODUCED OR COPIED OR USED IN WHOLE OR IN PART AS THE BASIS FOR THE MANUFACTURE OR SALE OF ITEMS WITHOUT WRITTEN PERMISSION. THIS IS AN UNPUBLISHED WORK PROTECTED UNDER THE FEDERAL COPYRIGHT LAWS.

digital

DRN.	PAUL GAGNE	DATE	28-JAN-87
CHK'D	D. HEALY	DATE	19-FEB-87
DES. ENG.	L. KIZINA	DATE	19-FEB-87
RESP. ENG.	G. LORD	DATE	19-FEB-87
MFG. ENG.	D. TAYLOR	DATE	19-FEB-87

TITLE: 2/4 MB MEMORY OPTION

SIZE	CODE	NUMBER	REV.
B	DD	MS400-0-DBU	A

SHEET 1 OF 1

DRB 128C
EN-01242-16-REV(1386)

ML01

AUTOMATED BY VAXKPL (V1.3)

P A R T S L I S T

LINE	ITEM	TOP DOCUMENT	PART NUMBER	MIN REV	DESCRIPTION	QUANTITY PER VARIATION/REVISION AA A1	BA A1
1	1	B-DD-5416802-0-0	54-16802-AA		MS400-AA 2MB MEM,SURFACE MNT,256K	1	-
2	2	B-DD-5416802-0-0	54-16802-BA		MS400-BA 4MB MEM,SURFACE MNT,256K	-	1
3	3	SEE NOTE	37-00689-25		PKG UNIVERSAL MODULE	1	1

3 NOTE: REFERENCE PACKAGE SPEC, FA-3700689-25

REVISION HISTORY			KPL MATRIX FORMAT	SECTION A OF A	DRN: PAUL GAGNE DATE: 15-SEP-86	D I G I T A L
ENG	ECO NUMBER	REV	SECTION/VARIATION INDEX		CHK'D: D. HEALY DATE: 25-FEB-87	TITLE PARTS LIST MEMORY UPGRADE
	INITIAL	A	[A] AA,BA [B] [C] [D] [E] [F] [H] [J]		DES.ENG: L. KIZINA DATE: 25-FEB-87 RESP.ENG.: G. LORD DATE: 25-FEB-87 MFG.ENG: D. TAYLOR DATE: 25-FEB-87	DOCUMENT NUMBER: SIZE K, CODE PL, NUMBER MS400-0-DBP, REV A RELEASE DATE: 25-FEB-87 RELEASE STATUS: RELEASED
			BASIC PART NUMBER: MS400	ASSEMBLY NUMBER:	TOP DOCUMENT NUMBER: K-PL-MS400-0-DBP	FILE NAME: MLA0754A.PLS EDIT # 13

"THIS DRAWING AND THE SPECIFICATIONS CONTAINED HEREIN ARE CONFIDENTIAL AND PROPRIETARY. THEY ARE THE PROPERTY OF DIGITAL EQUIPMENT CORPORATION AND SHALL NOT BE REPRODUCED OR COPIED OR USED IN WHOLE OR IN PART AS THE BASIS FOR THE MANUFACTURE OR SALE OF ITEMS WITHOUT WRITTEN PERMISSION. THIS IS AN UNPUBLISHED WORK PROTECTED UNDER THE FEDERAL COPYRIGHT LAWS."

$

DRAWING NO.	NO.SHTS	PART NO.	DESCRIPTION	REVISIONS
		5416802-AA	2 MB MEMORY OPTION	A1 A2
		5416802-BA	4 MB MEMORY OPTION	A1 A2
D-UA-5416802-0-0	2		UNIT ASSEMBLY	A
D-UA-5416802-1-0	2		UNIT ASSEMBLY	A
B-CS-5416802-0-0	11		CIRCUIT SCHEMATICS	A A
K-PL-5416802-0-DBP	3		PARTS LIST	A A
K-PC-5416802-0-DBC			P.C. DATA BASE	A A
K-CS-5416802-0-DBX			SCHEMATIC DATA BASE	D A
		5016801-01	ETCHED CIRCUIT BOARD	A A
K-DD-5016801-0-0	1		DRAWING DIRECTORY	D1 D2
				A A

NOTES:

REVISION HISTORY			
REV	ECO	DATE	
A	INIT	10/6/86	

THIS DRAWING AND THE SPECIFICATIONS CONTAINED HEREIN ARE CONFIDENTIAL AND PROPRIETARY. THEY ARE THE PROPERTY OF DIGITAL EQUIPMENT CORPORATION AND SHALL NOT BE REPRODUCED OR COPIED OR USED IN WHOLE OR IN PART AS THE BASIS FOR THE MANUFACTURE OR SALE OF ITEMS WITHOUT WRITTEN PERMISSION. THIS IS AN UNPUBLISHED WORK PROTECTED UNDER THE FEDERAL COPYRIGHT LAWS.

DRN: J. CUNNINGHAM	DATE: 10/7/86	digital
CHK'D: L. HAYWOOD	DATE: 10/7/86	TITLE: 2/4 MB MEMORY OPTION
DES.ENG.: G. LORD	DATE: 10/7/86	SHEET 1 OF 1 / EDIT: 3
RESP.ENG.: G. LORD	DATE: 10/7/86	DOCUMENT NUMBER / DD FILENAME: 5416802A.DDF
MFG.ENG.: D. TAYLOR	DATE: 1/20/86	SIZE: K / CODE: DD / NUMBER: 5416802-0-0 / REV: A

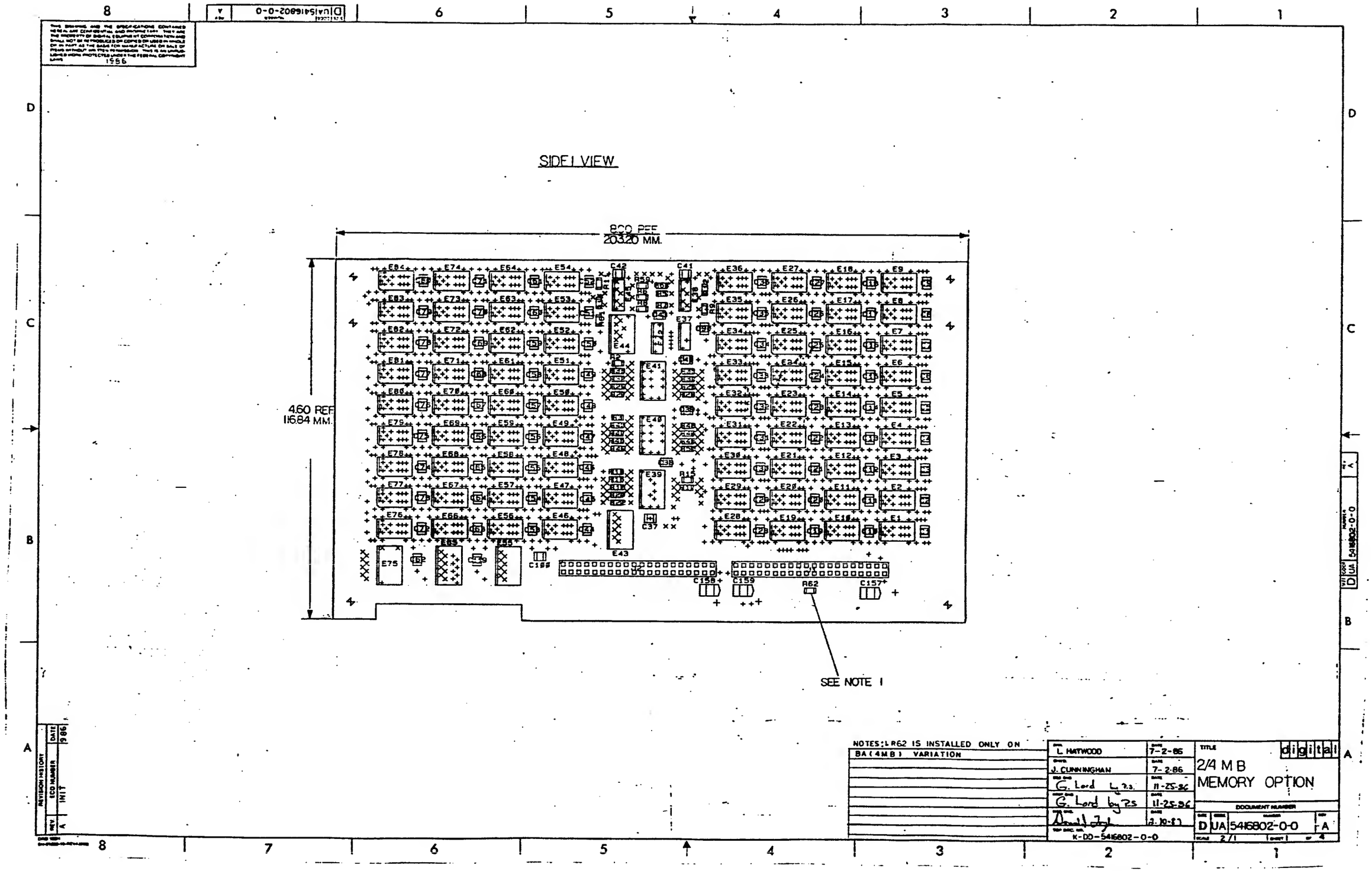
SIDE 1 VIEW
8.00 REF
203.20 MM.
4.60 REF
116.84 MM.
SEE NOTE 1
NOTES: 1. R62 IS INSTALLED ONLY ON
BA (4MB) VARIATION
L. HAYWOOD
7-2-86
J. CUNNINGHAN
7-2-86
G. Lord by P.S.
11-25-86
G. Lord by P.S.
11-25-86
2-10-87
K-DD-5416802-0-0
TITLE
digital
2/4 M B
MEMORY OPTION
DOCUMENT NUMBER
D UA 5416802-0-0 A
SCALE 2/1
SHEET 1 OF 4
REVISION HISTORY
REV. ECO NUMBER DATE
A INIT 9-86

THIS DRAWING AND SPECIFICATIONS, HEREIN, ARE THE PROPERTY OF DIGITAL EQUIPMENT CORPORATION AND SHALL NOT BE REPRODUCED OR COPIED OR USED IN WHOLE OR IN PART AS THE BASIS FOR THE MANUFACTURE OR SALE OF ITEMS WITHOUT WRITTEN PERMISSION.
COPYRIGHT ©
1986 DIGITAL EQUIPMENT CORPORATION

D UA 5416802-0-0 A

SIDE 2 VIEW

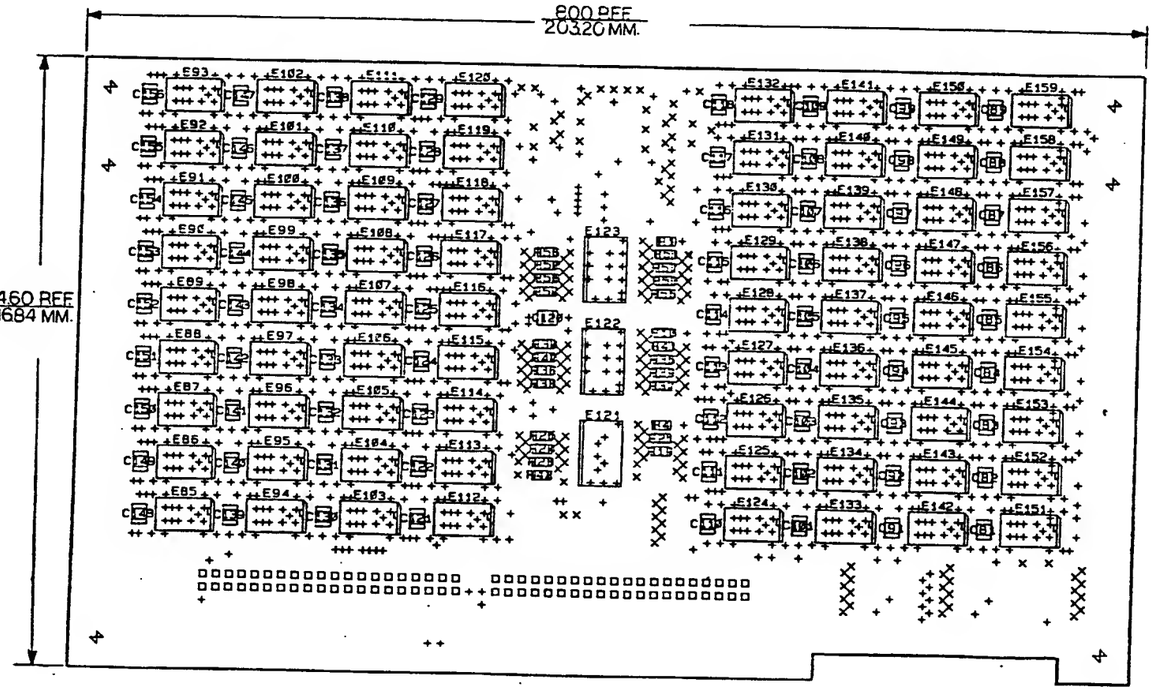

REVISION HISTORY

DATE	ECO NUMBER	REV

TITLE 2/4 MB MEMORY OPTION

DOCUMENT NUMBER

SIZE	CODE	NUMBER	REV
D	UA	5416802-0-0	A

SCALE 2 : 1 SHEET 2 OF 4

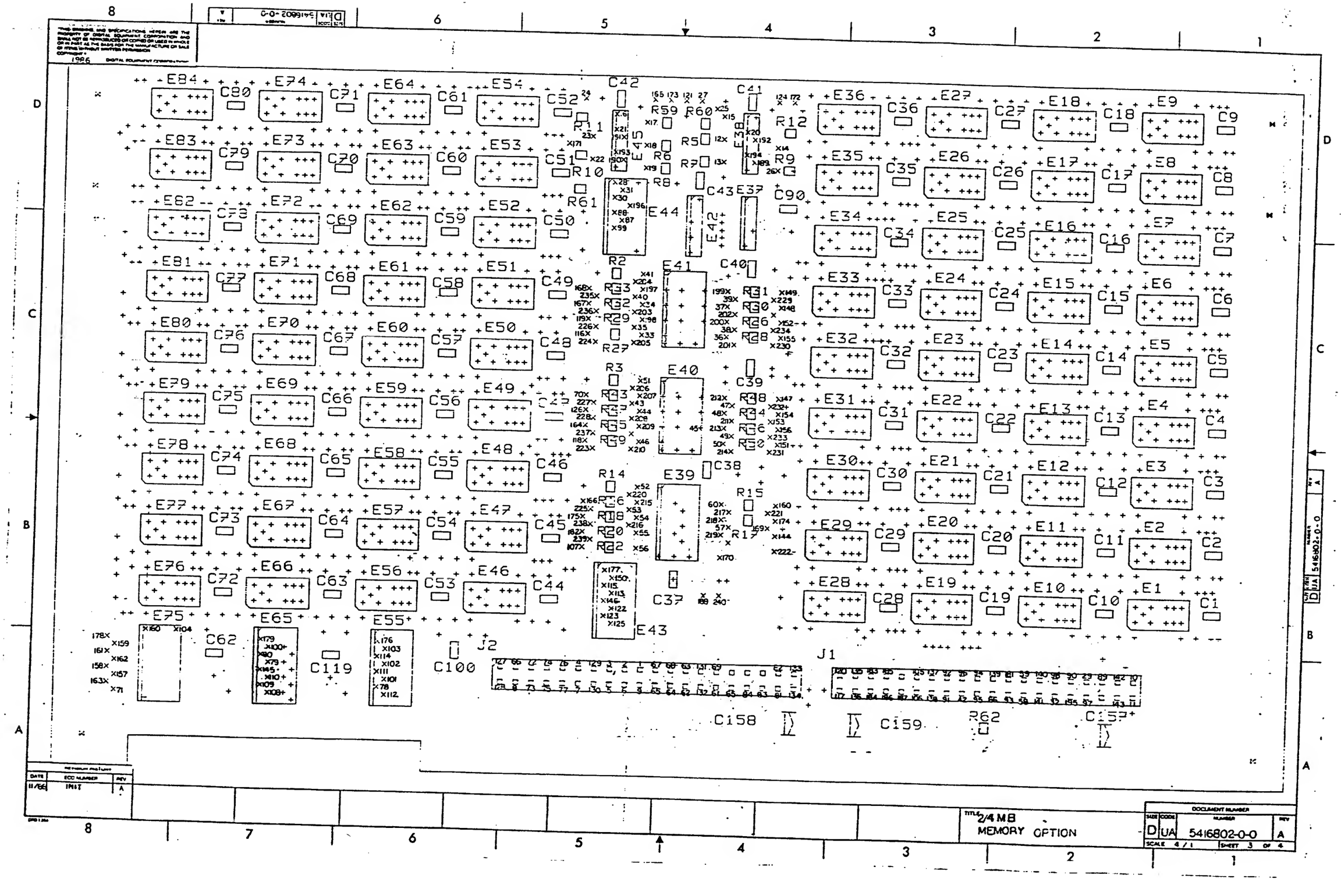

1986
DIGITAL EQUIPMENT CORPORATION
DATE
ECO NUMBER
REV
11/86
INIT
A
TITLE 2/4 MB
MEMORY OPTION
DOCUMENT NUMBER
SIZE
CODE
NUMBER
REV
D
UA
5416802-0-0
A
SCALE 4/1
SHEET 3 OF 4

THIS DRAWING AND SPECIFICATIONS HEREIN ARE THE PROPERTY OF DIGITAL EQUIPMENT CORPORATION AND SHALL NOT BE REPRODUCED OR COPIED OR USED IN WHOLE OR IN PART AS THE BASIS FOR THE MANUFACTURE OR SALE OF ITEMS WITHOUT WRITTEN PERMISSION
COPYRIGHT © 1986 DIGITAL EQUIPMENT CORPORATION

(DIMENSIONS ARE GIVEN RELATIVE TO "H" MASTER 0)

ASSOCIATED PIN ID	X	Y	SIGNAL NAME	LOCATION CODE
J2.19	6.900	2.400	BDAL17 H	1
J2.17	7.000	2.400	BDAL19 H	2
J2.15	7.100	2.400	BDAL21 H	3
J2.11	7.300	2.400	BDAL23 H	4
J2.16	7.100	2.300	BDAL20 H	5
J2.18	7.000	2.300	BDAL18 H	6
J2.12	7.300	2.300	BDAL22 H	7
J2.4	7.700	2.300	BDAL30 H	8
J2.20	6.900	2.300	BDAL16 H	9
J1.39	3.700	2.400	+5VA	10
J1.40	3.700	2.300	+5VA	11
E38.4	6.450	5.900	E38.4	12
E38.7	6.400	5.750	E38.7	13
E38.12	6.100	5.850	E38.12	14
E39.1	6.450	6.050	E39.1	15
E45.1	7.150	6.050	E45.1	16
E45.15	6.950	6.000	E45.15	17
E45.12	6.950	5.850	E45.12	18
E45.9	6.950	5.700	E45.9	19
E38.3	6.300	5.950	E38.3	20
E45.3	7.150	5.950	E45.3	21
E45.7	7.300	5.750	E45.7	22
E45.4	7.300	5.900	E45.4	23
R11.2	7.350	6.150	MRAS40 L	24
R2	6.500	6.100	R2	25
E38.9	6.100	5.700	E38.9	26
R7.2	6.600	6.150	MRAS31 L	27
E44.1	7.150	5.600	E44.1	28
J1.33	4.000	2.400	MSELA H	29
E44.3	7.150	5.500	MSELA H	30
R44.2	7.100	5.550	E44.2	31
J1.30	4.200	2.300	MRAS L	32
E41.9	6.950	4.600	E41.9	33
E41.5	6.950	4.800	E41.5	34
R29.1	7.000	4.650	R29.1	35
E41.12	6.400	4.600	E41.12	36
E41.16	6.400	4.800	E41.16	37
R26.1	6.350	4.650	R26.1	38
R31.1	6.350	4.850	R31.1	39
R33.1	7.000	4.850	R33.1	40
E41.1	6.950	5.000	E41.1	41
J1.18	4.800	2.300	MEMADD2 H	42
R43.1	7.000	4.150	R43.1	43
E40.5	6.950	4.100	E40.5	44

ASSOCIATED PIN ID	X	Y	SIGNAL NAME	LOCATION CODE
E40.14	6.550	4.000	E40.14	45
E40.9	6.950	3.900	E40.9	46
R45.1	6.350	4.150	R45.1	47
E40.16	6.400	4.100	E40.16	48
R46.1	6.350	3.950	R46.1	49
E40.12	6.400	3.900	E40.12	50
E40.1	6.950	4.300	E40.1	51
E39.1	6.950	3.600	E39.1	52
R16.1	7.000	3.450	R16.1	53
E39.5	6.950	3.400	E39.5	54
E39.7	6.950	3.300	E39.7	55
E39.9	6.950	3.200	E39.9	56
R17.1	6.350	3.350	R17.1	57
J1.26	4.400	2.300	CAS0 L	58
J1.25	4.400	2.400	CAS1 L	59
E39.18	6.400	3.500	E39.18	60
J2.30	6.400	2.300	BDAL08 H	61
J2.26	6.600	2.300	BDAL10 H	62
J2.25	6.600	2.400	BDAL11 H	63
J2.24	6.700	2.300	BDAL12 H	64
J2.22	6.800	2.300	BDAL14 H	65
J2.3	7.700	2.400	BDAL31 H	66
J2.21	6.800	2.400	BDAL15 H	67
J2.23	6.700	2.400	BDAL13 H	68
J2.29	6.400	2.400	BDAL09 H	69
R43.2	7.300	4.200	BMAD27 H	70
E75.9	10.300	2.200	MDAL15 H	71
J2.5	7.600	2.400	BDAL29 H	72
J2.6	7.600	2.300	BDAL28 H	73
J2.7	7.500	2.400	BDAL27 H	74
J2.8	7.500	2.300	BDAL26 H	75
J2.9	7.400	2.400	BDAL25 H	76
J2.10	7.400	2.300	BDAL24 H	77
E55.8	8.600	2.250	MDAL30 H	78
E65.5	9.300	2.400	MDAL03 H	79
E65.4	9.350	2.450	MDAL02 H	80
J2.38	6.000	2.300	BDAL00 H	81
J2.37	6.000	2.400	BDAL01 H	82
J2.36	6.100	2.300	BDAL02 H	83
J2.35	6.100	2.400	BDAL06 H	84
J2.31	6.300	2.400	BDAL07 H	85
J1.22	4.600	2.300	J1.22	86
E44.6	7.100	5.350	E44.6	87
E44.5	7.150	5.400	E44.5	88
J1.35	3.900	2.400	VDRE L	89
J1.31	4.100	2.400	SRAS L	90
J1.16	4.900	2.300	MEMADD4 H	91
J1.15	4.900	2.400	MEMADD5 H	92
J1.24	4.500	2.300	CAS2 L	93

ASSOCIATED PIN ID	X	Y	SIGNAL NAME	LOCATION CODE
J1.19	4.700	2.400	MEMADD1 H	94
J1.20	4.700	2.300	MEMADD0 H	95
J1.17	4.800	2.400	MEMADD3 H	96
J1.34	4.000	2.300	VAS L	97
J1.29	4.200	2.400	MSELC H	98
E44.7	7.150	5.300	MSELC H	99
E65.3	9.300	2.500	MDAL01 H	100
E55.7	8.550	2.300	MDAL29 H	101
E55.5	8.550	2.400	MDAL27 H	102
E55.3	8.550	2.500	MDAL25 H	103
E75.19	9.900	2.600	E75.19	104
J1.11	5.100	2.400	MEMADD7 H	105
J1.12	5.100	2.300	MEMADD6 H	106
R22.2	7.300	3.200	MCAS03 L	107
E65.9	9.300	2.200	MDAL07 H	108
E65.8	9.350	2.250	MDAL06 H	109
E65.7	9.300	2.300	MDAL05 H	110
E55.6	8.600	2.350	MDAL28 H	111
E55.4	8.550	2.200	MDAL31 H	112
R43.5	7.100	2.900	MDAL19 H	113
E55.4	8.600	2.400	MDAL26 H	114
E43.4	7.150	2.950	MDAL18 H	115
R27.2	7.300	4.600	BMAD21 H	116
J1.2	5.600	2.300	+5VB	117
R49.2	7.500	3.900	BMAD25 H	118
R29.2	7.300	4.700	BMAD22 H	119
J1.1	5.600	2.400	+5VC	120
R5.2	6.700	6.150	MRAS41 L	121
E43.7	7.100	2.800	MDAL21 H	122
E43.8	7.150	2.750	MDAL22 H	123
R9.2	6.100	6.150	MRAS21 L	124
E43.9	7.100	2.700	MDAL23 H	125
R47.2	7.300	4.100	BMAD24 H	126
J2.1	7.800	2.400	GND	127
J2.2	7.800	2.300	GND	128
J2.13	7.200	2.400	GND	129
J2.14	7.200	2.300	GND	130
J2.27	6.500	2.400	GND	131
J2.28	6.500	2.300	GND	132
J2.39	5.900	2.400	GND	133
J2.40	5.900	2.300	GND	134
J1.3	5.500	2.400	GND	135
J1.4	5.500	2.300	GND	136
J1.13	5.000	2.400	GND	137
J1.14	5.000	2.300	GND	138
J1.21	4.600	2.400	GND	139
J1.27	4.300	2.400	GND	140
J1.28	4.300	2.300	GND	141
J1.37	3.800	2.400	GND	142

ASSOCIATED PIN ID	X	Y	SIGNAL NAME	LOCATION CODE
J1.38	3.800	2.300	GND	143
R23.2	6.050	3.300	MCAS12 L	144
E65.6	9.350	2.350	MDAL04 H	145
E43.6	7.150	2.850	MDAL20 H	146
R4.R2	6.050	4.200	BMAD14 H	147
R30.2	6.050	4.800	BMAD13 H	148
R31.2	6.050	4.900	BMAD10 H	149
R43.3	7.100	3.000	MDAL17 H	150
	6.050	3.900	BMAD16 H	151
R26.2	6.050	4.700	BMAD11 H	152
R40.2	6.100	4.050	BMAD37 H	153
R44.2	6.050	4.100	BMAD17 H	154
R28.2	6.050	4.600	BMAD12 H	155
R6.2	6.050	4.000	BMAD15 H	156
E75.7	10.300	2.300	MDAL13 H	157
E75.6	10.350	2.350	MDAL12 H	158
E75.3	10.300	2.500	MDAL09 H	159
R15.2	6.050	3.500	BMAD28 H	160
E75.4	10.350	2.450	MDAL10 H	161
E75.5	10.300	2.400	MDAL11 H	162
E75.8	10.350	2.250	MDAL14 H	163
R45.2	7.300	4.000	BMAD26 H	164
R8.2	6.900	6.150	MRAS20 L	165
R16.2	7.300	3.500	MCAS00 L	166
R32.2	7.300	4.800	BMAD20 H	167
R33.2	7.300	4.900	BMAD23 H	168
R24.2	6.100	3.350	MCAS11 L	169
E39.12	6.400	3.150	BWRT10 L	170
R10.2	7.450	5.850	MRAS30 L	171
R12.2	6.000	6.150	MRAS11 L	172
R6.2	6.800	6.150	MRAS10 L	173
R17.2	6.050	3.400	BMAD18 H	174
R18.2	7.300	3.400	MCAS01 L	175
R55.2	8.600	2.550	MDAL24 H	176
R43.2	7.150	3.050	MDAL16 H	177
E75.2	10.350	2.550	MDAL08 H	178
E65.2	9.350	2.550	MDAL00 H	179
E75.1	10.100	2.600	BWRITE L	180
J1.23	4.500	2.400	CAS3 L	181
R20.2	7.300	3.300	MCAS02 L	182
J1.5	5.400	2.400	PBIT3 H	183
J1.6	5.400	2.300	PBIT2 H	184
J1.7	5.300	2.400	PBIT1 H	185
J1.8	5.300	2.300	PBIT0 H	186
R1.10	5.200	2.300	MEMBADD8 H	187
E39.14	6.500	2.900	BWRT20 L	188
E38.10	6.250	5.750	E38.10	189
E45.10	7.100	5.750	E45.10	190
E45.13	7.100	5.900	E45.13	191

ASSOCIATED PIN ID	X	Y	SIGNAL NAME	LOCATION CODE
E38.13	6.250	5.900	E38.13	192
E45.6	7.150	5.800	E45.6	193
E38.6	6.300	5.800	E38.6	194
J1.32	4.100	2.300	MSELB H	195
E44.4	7.050	5.450	MSELB H	196
E123.18	6.950	4.900	E123.18	197
E123.14	6.950	4.700	E123.14	198
E123.3	6.400	4.900	E123.3	199
E123.7	6.400	4.700	E123.7	200
R54.1	6.350	4.50	R54.1	201
R52.1	6.350	4.750	R52.1	202
R57.1	7.000	4.750	R57.1	203
R1.2	7.000	4.950	R1.2	204
R55.1	7.000	4.550	R55.1	205
R13.2	7.000	4.250	R13.2	206
E122.18	6.950	4.200	E122.18	207
R35.1	7.000	4.050	R35.1	208
E122.14	6.950	4.000	E122.14	209
R37.1	7.000	3.850	R37.1	210
R40.1	6.350	4.050	R40.1	211
E122.3	6.400	4.200	E122.3	212
E122.7	6.400	4.00	E122.7	213
R38.1	6.350	3.850	R38.1	214
E121.18	6.950	3.500	E121.18	215
R19.1	7.000	3.350	R19.1	216
R25.1	6.350	3.450	R25.1	217
E121.5	6.400	3.400	E121.5	218
E121.7	6.400	3.300	E121.7	219
R4.2	7.000	3.550	R4.2	220
R25.2	6.100	3.450	MCAS10 L	221
R42.2	6.050	3.200	MCAS13 L	222
R37.2	7.250	3.850	BMAD45 H	223
R55.2	7.250	4.550	BMAD41 H	224
R21.2	7.250	3.450	BMAD48 H	225
R53.2	7.250	4.650	BMAD42 H	226
R41.2	7.250	4.150	BMAD47 H	227
R35.2	7.250	4.050	BMAD44 H	228
R54.2	6.100	4.850	BMAD30 H	229
R52.2	6.100	4.550	BMAD32 H	230
R38.2	6.100	3.850	BMAD36 H	231
R34.2	6.100	4.150	BMAD34 H	232
R36.2	6.100	3.950	BMAD35 H	233
R58.2	6.100	4.650	BMAD31 H	234
R51.2	7.250	4.850	BMAD43 H	235
R57.2	7.250	4.750	BMAD40 H	236
R39.2	7.250	3.950	BMAD46 H	237
R19.2	7.250	3.350	BMAD38 H	238
E121.14	7.250	3.250	BWRT40 L	239
E121.12	6.400	2.900	BWRT30 L	240

REVISION HISTORY

DATE	ECO NUMBER	REV
1/86	INIT	A

TITLE 2/4 MB MEMORY OPTION

SIZE	CODE	DOCUMENT NUMBER	REV
D	UA	5416802-0-0	A

SIDE I VIEW

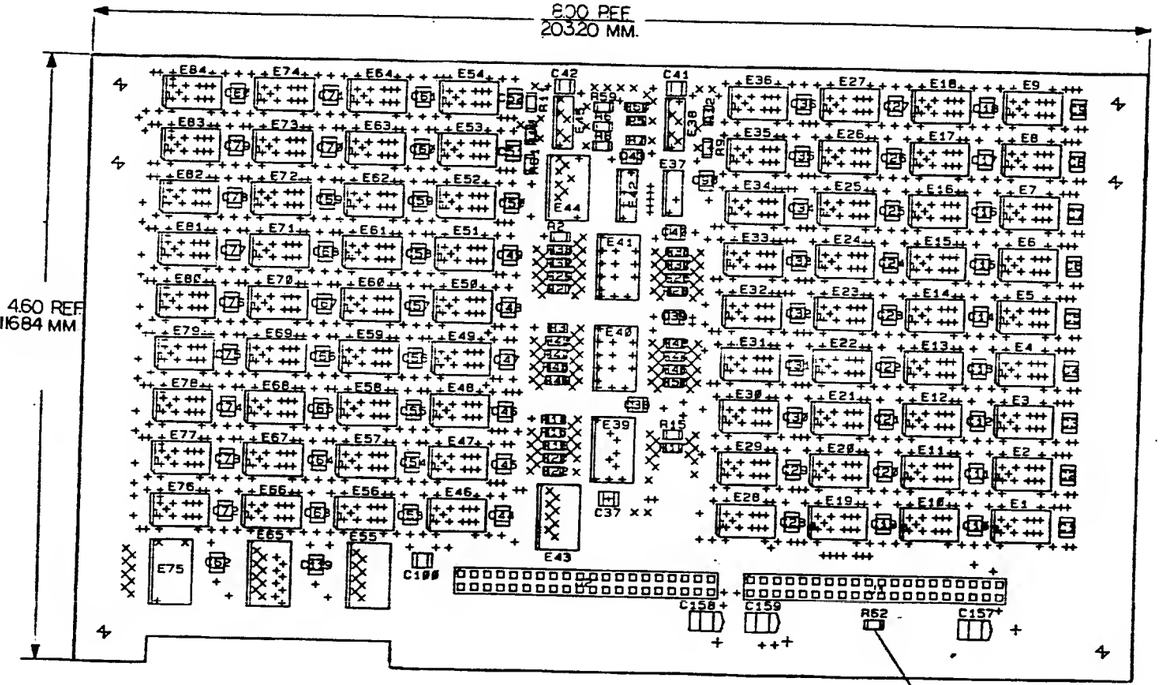

NOTES: 1. R62 IS INSTALLED ONLY ON BA (4MB) VARIATION.

REVISION HISTORY			
REV	ECO NUMBER	INIT	DATE
A			9/86

DRAWN	L HAYWOOD	DATE	7-2-86
CHECKED	J. CUNNINGHAM	DATE	7-2-86
ISSUE ENG	C. Lord by P.S	DATE	11-25-86
GROUP ENG	C. Lord by P.S	DATE	11-25-86
TEST ENG		DATE	2-10-87
TEST SPEC. NO	K-DD-5416902-0-0		

TITLE: digital
2/4 M B MEMORY OPTION

DOCUMENT NUMBER			
SIZE	CODE	NUMBER	REV
D	UA	5416802-1-0	A
SCALE 2/1		SHEET 1 OF 4	

THIS DRAWING AND SPECIFICATIONS, HEREIN, ARE THE PROPERTY OF DIGITAL EQUIPMENT CORPORATION AND SHALL NOT BE REPRODUCED OR COPIED OR USED IN WHOLE OR IN PART AS THE BASIS FOR THE MANUFACTURE OR SALE OF ITEMS WITHOUT WRITTEN PERMISSION.
COPYRIGHT © 1985 DIGITAL EQUIPMENT CORPORATION

SIDE 2 VIEW

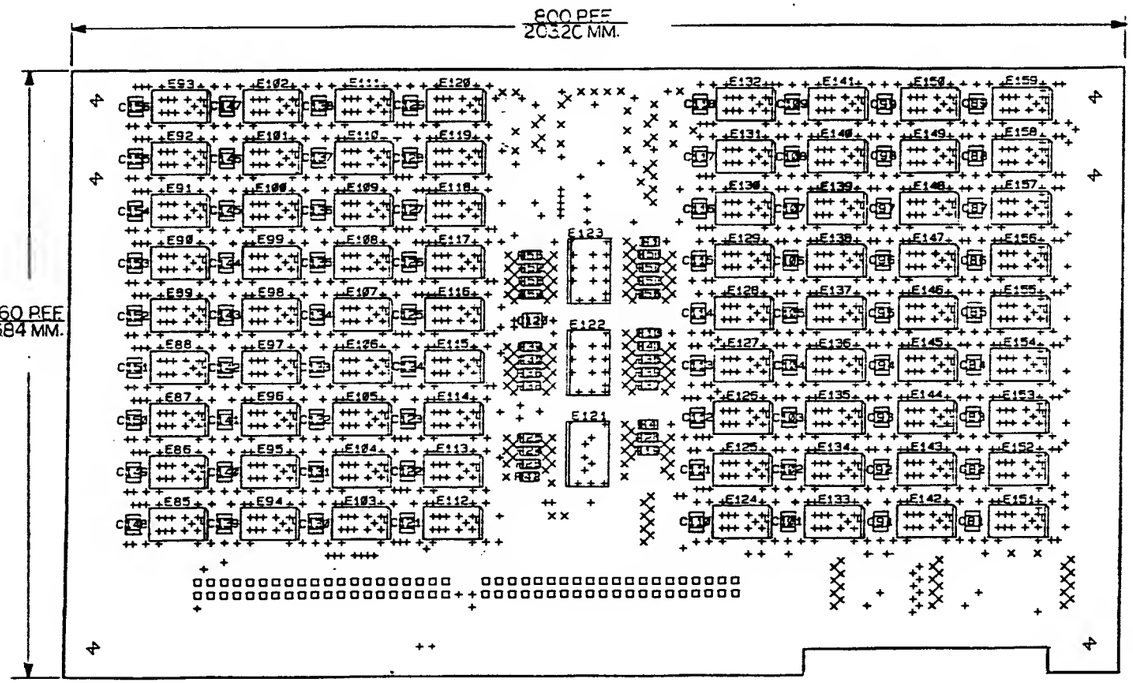

REVISION HISTORY		
DATE	ECO NUMBER	REV
[illegible]	INIT	A

TITLE 2/4 M B MEMORY OPTION

DOCUMENT NUMBER			
SIZE	CODE	NUMBER	REV
D	UA	5416802-1-0	A

SCALE 2/1 SHEET 2 OF 5

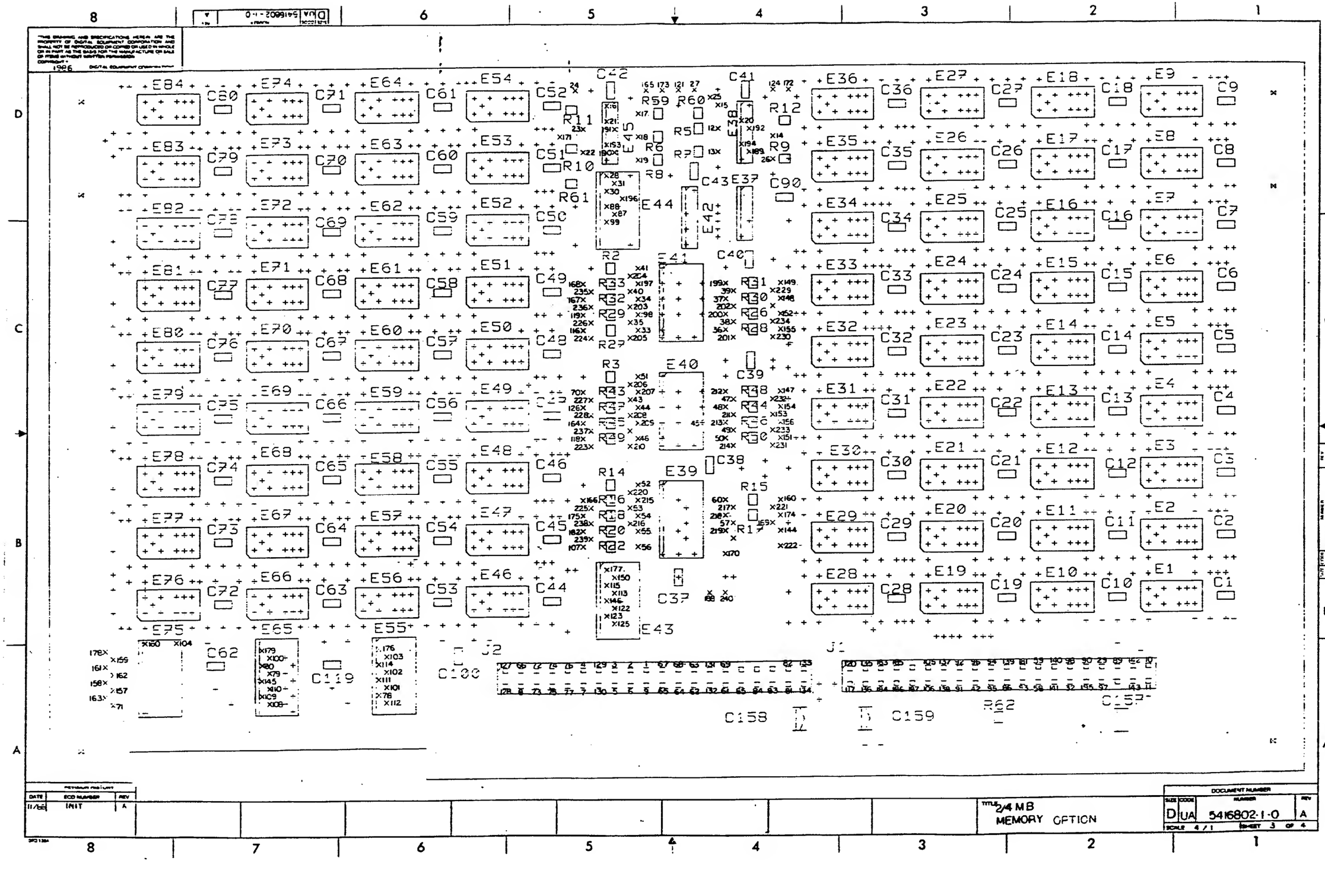

DATE	ECO NUMBER	REV
11/86	INIT	A

TITLE 2/4 MB MEMORY OPTION

SIZE	CODE	NUMBER	REV
D	UA	5416802-1-0	A

SCALE 4/1 SHEET 3 OF 4

THIS DRAWING AND SPECIFICATIONS, HEREIN, ARE THE PROPERTY OF DIGITAL EQUIPMENT CORPORATION AND SHALL NOT BE REPRODUCED OR COPIED OR USED IN WHOLE OR IN PART AS THE BASIS FOR THE MANUFACTURE OR SALE OF ITEMS WITHOUT WRITTEN PERMISSION.
COPYRIGHT © 1986 DIGITAL EQUIPMENT CORPORATION

(DIMENSIONS ARE GIVEN RELATIVE TO "H" MASTER 0)

ASSOCIATED PIN ID	X	Y	SIGNAL NAME	LOCATION CODE
J2.19	6.900	2.400	HDAL17 H	1
J2.17	7.000	2.400	HDAL19 H	2
J2.15	7.100	2.400	HDAL21 H	3
J2.11	7.300	2.400	HDAL23 H	4
J2.16	7.100	2.300	HDAL20 H	5
J2.18	7.000	2.300	HDAL18 H	6
J2.12	7.300	2.300	HDAL22 H	7
J2.4	7.700	2.300	HDAL30 H	8
J2.20	6.900	2.300	HDAL16 H	9
J1.39	3.700	2.400	+5VA	10
J1.40	3.700	2.300	+5VA	11
E38.4	6.450	5.900	E38.4	12
E38.7	6.400	5.750	E38.7	13
E38.12	6.100	5.850	E38.12	14
E38.1	6.450	5.050	E38.1	15
E45.1	7.150	6.050	E45.1	16
E45.15	6.950	6.000	E45.15	17
E45.12	6.950	5.850	E45.12	18
E45.9	6.950	5.700	E45.9	19
E36.3	6.300	5.950	E38.3	20
E45.3	7.150	5.950	E45.3	21
E45.7	7.300	5.750	E45.7	22
E45.4	7.300	5.900	E45.4	23
R11.2	7.350	6.150	MRAS40 L	24
R2	6.500	6.100	R2	25
E38.9	6.100	5.700	E38.9	26
R7.2	6.600	6.150	MRAS31 L	27
E44.1	7.150	5.600	E44.1	28
J1.33	4.000	2.400	MSELA H	29
E44.3	7.150	5.500	MSELA H	30
E44.2	7.100	5.550	E44.2	31
J1.30	4.200	2.300	ERAS L	32
E41.9	6.950	4.600	E41.9	33
E41.5	6.950	4.800	E41.5	34
R29.1	7.000	4.650	R29.1	35
E41.12	6.400	4.600	E41.12	36
E41.16	6.400	4.800	E41.16	37
R26.1	6.350	4.650	R26.1	38
R31.1	6.350	4.850	R31.1	39
R33.1	7.000	4.850	R33.1	40
E41.1	6.950	5.000	E41.1	41
J1.18	4.800	2.300	MEMADD2 H	42
R43.1	7.000	4.150	R43.1	43
E40.5	6.950	4.100	E40.5	44

ASSOCIATED PIN ID	X	Y	SIGNAL NAME	LOCATION CODE
E40.14	6.550	4.000	E40.14	45
E40.9	6.950	3.900	E40.9	46
R48.1	6.350	4.150	R48.1	47
E40.16	6.400	4.100	E40.16	48
R46.1	6.350	3.950	R46.1	49
E40.12	6.400	3.900	E40.12	50
E40.1	6.950	4.300	E40.1	51
E39.1	6.950	3.500	E39.1	52
R16.1	7.000	3.450	R16.1	53
E39.5	6.950	3.400	E39.5	54
E39.7	6.950	3.300	E39.7	55
E39.9	6.950	3.200	E39.9	56
R17.1	6.350	3.350	R17.1	57
J1.26	4.400	2.300	LAS0 L	58
J1.25	4.400	2.400	CAS1 L	59
E39.18	6.400	3.500	E39.18	60
J2.30	6.400	2.300	HDAL08 H	61
J2.26	6.600	2.300	HDAL10 H	62
J2.25	6.600	2.400	HDAL11 H	63
J2.24	6.700	2.300	HDAL12 H	64
J2.22	6.800	2.300	HDAL14 H	65
J2.3	7.700	2.400	HDAL31 H	66
J2.21	6.800	2.400	HDAL15 H	67
J2.23	6.700	2.400	HDAL13 H	68
J2.29	6.400	2.400	HDAL09 H	69
R43.2	7.300	4.200	HMAD27 H	70
E75.9	10.300	2.200	MDAL15 H	71
J2.5	7.600	2.400	HDAL29 H	72
J2.6	7.600	2.300	HDAL28 H	73
J2.7	7.500	2.400	HDAL27 H	74
J2.8	7.500	2.300	HDAL26 H	75
J2.9	7.400	2.400	HDAL25 H	76
J2.10	7.400	2.300	HDAL24 H	77
E55.8	8.600	2.250	MDAL30 H	78
E65.5	9.300	2.400	MDAL03 H	79
E65.4	9.350	2.450	MDAL02 H	80
J2.36	6.000	2.300	HDAL00 H	81
J2.37	6.000	2.400	HDAL01 H	82
J2.36	6.100	2.300	HDAL02 H	83
J2.35	6.100	2.400	HDAL06 H	84
J2.31	6.300	2.400	HDAL07 H	85
J1.22	4.600	2.300	J1.22	86
E44.6	7.100	5.350	E44.6	87
E44.5	7.150	5.400	E44.5	88
J1.35	3.900	2.400	VDBE L	89
J1.31	4.100	2.400	SRAS L	90
J1.16	4.900	2.300	MEMADD4 H	91
J1.15	4.900	2.400	MEMADD5 H	92
J1.24	4.500	2.300	CAS2 L	93

ASSOCIATED PIN ID	X	Y	SIGNAL NAME	LOCATION CODE
J1.19	4.700	2.400	MEMADD1 H	94
J1.20	4.700	2.300	MEMADD0 H	95
J1.17	4.800	2.400	MEMADD3 H	96
J1.34	4.300	2.300	VAS L	97
J1.29	4.200	2.400	MSELC H	98
E44.7	7.150	5.300	MSELC H	99
E65.3	9.300	2.500	MDAL01 H	100
E55.7	8.550	2.300	MDAL29 H	101
E55.5	8.550	2.400	MDAL27 H	102
E55.3	8.550	2.500	MDAL25 H	103
E75.19	9.900	2.600	E75.19	104
J1.11	5.100	2.400	MEMADD7 H	105
J1.12	5.100	2.300	MEMADD6 H	106
R22.2	7.300	3.200	MCAS03 L	107
E65.9	9.300	2.200	MDAL07 H	108
E65.8	9.350	2.250	MDAL06 H	109
E65.7	9.300	2.300	MDAL05 H	110
E55.6	8.600	2.350	MDAL28 H	111
E55.9	6.550	2.200	MDAL31 H	112
E43.5	7.100	2.900	MDAL19 H	113
E55.4	8.600	2.400	MDAL25 H	114
E43.4	7.150	2.950	MDAL18 H	115
R27.2	7.300	4.600	BMAD21 H	116
J1.2	5.600	2.300	+5VB	117
R49.2	7.500	3.900	BMAD25 H	118
R29.2	7.300	4.700	BMAD22 H	119
J1.1	5.600	2.400	+5VC	120
R5.2	6.700	6.150	MRAS41 L	121
E43.7	7.100	2.800	MDAL21 H	122
E43.8	7.150	2.750	MDAL22 H	123
R9.2	6.100	6.150	MRAS21 L	124
E43.9	7.100	2.700	MDAL23 H	125
R47.2	7.300	4.100	BMAD24 H	126
J2.1	7.800	2.400	GND	127
J2.2	7.800	2.300	GND	128
J2.13	7.200	2.400	GND	129
J2.14	7.200	2.300	GND	130
J2.27	6.500	2.400	GND	131
J2.28	6.500	2.300	GND	132
J2.39	5.900	2.400	GND	133
J2.40	5.900	2.300	GND	134
J1.3	5.500	2.400	GND	135
J1.4	5.500	2.300	GND	136
J1.13	5.000	2.400	GND	137
J1.14	5.000	2.300	GND	138
J1.21	4.600	2.400	GND	139
J1.27	4.300	2.400	GND	140
J1.26	4.300	2.300	GND	141
J1.37	3.800	2.400	GND	142

ASSOCIATED PIN ID	X	Y	SIGNAL NAME	LOCATION CODE
J1.38	3.800	2.300	GND	143
R23.2	6.050	3.300	MCAS12 L	144
E65.6	9.350	2.350	MDAL04 H	145
E43.6	7.150	2.850	MDAL20 H	146
R48.2	6.050	4.200	BMAD14 H	147
R30.2	6.050	4.800	BMAD13 H	148
R31.2	6.050	4.900	BMAD10 H	149
E43.3	7.100	3.000	MDAL17 H	150
	6.050	3.900	BMAD16 H	151
R26.2	6.050	4.700	BMAD11 H	152
R40.2	6.100	4.050	BMAD37 H	153
R44.2	6.050	4.100	BMAD17 H	154
R28.2	6.050	4.600	BMAD12 H	155
46.2	6.050	4.000	BMAD15 H	156
E75.7	10.300	2.300	MDAL13 H	157
E75.6	10.350	2.350	MDAL12 H	158
E75.3	10.300	2.500	MDAL09 H	159
R15.2	6.050	3.500	BMAD28 H	160
E75.4	10.350	2.450	MDAL10 H	161
E75.5	10.300	2.400	MDAL11 H	162
E75.8	10.350	2.250	MDAL14 H	163
R45.2	7.300	4.000	BMAD26 H	164
R8.2	6.900	6.150	MRAS20 L	165
R16.2	7.300	3.500	MCAS00 L	166
R32.2	7.300	4.800	BMAD20 H	167
R33.2	7.300	4.900	BMAD23 H	168
R24.2	6.100	3.350	MCAS11 L	169
E39.12	6.400	3.150	BWRT10 L	170
R10.2	7.450	5.850	MRAS30 L	171
R12.2	6.000	6.150	MRAS11 L	172
R6.2	6.800	6.150	MRAS10 L	173
R17.2	6.050	3.400	BMAD18 H	174
R18.2	7.300	3.400	MCAS01 L	175
E55.2	8.600	2.550	MDAL24 H	176
E43.2	7.150	3.050	MDAL16 H	177
E75.2	10.350	2.550	MDAL08 H	178
E65.2	9.350	2.550	MDAL00 H	179
E75.1	10.100	2.600	HWRITE L	180
J1.23	4.500	2.400	CAS3 L	181
R20.2	7.300	3.300	MCAS02 L	182
J1.5	5.400	2.400	PBIT3 H	183
J1.6	5.400	2.300	PBIT2 H	184
J1.7	5.300	2.400	PBIT1 H	185
J1.8	5.300	2.300	PBIT0 H	186
R1.10	5.200	2.300	MEMBADD8 H	187
E39.14	6.500	2.900	BWRT20 L	188
E38.10	6.250	5.750	E38.10	189
E45.10	7.100	5.750	E45.10	190
E45.13	7.100	5.900	E45.13	191

ASSOCIATED PIN ID	X	Y	SIGNAL NAME	LOCATION CODE
R38.13	6.250	5.900	E38.13	192
E45.6	7.150	5.800	E45.6	193
E38.6	6.300	5.800	E38.6	194
J1.32	4.100	2.300	MSELB H	195
E44.4	7.050	5.450	MSELB H	196
E123.18	6.950	4.900	E123.18	197
E123.14	6.950	4.700	E123.14	198
E123.3	6.400	4.900	E123.3	199
E123.7	6.400	4.700	E123.7	200
R54.1	6.350	4.50	R54.1	201
R52.1	6.350	4.750	R52.1	202
R57.1	7.000	4.750	R57.1	203
R1.2	7.000	4.950	R1.2	204
R55.1	7.000	4.550	R55.1	205
R13.2	7.000	4.250	R13.2	206
E122.18	6.950	4.200	E122.18	207
R35.1	7.000	4.050	R35.1	208
E122.14	6.950	4.000	E122.14	209
R37.1	7.000	3.950	R37.1	210
R40.1	6.350	4.050	R40.1	211
E122.3	6.400	4.200	E122.3	212
E122.7	6.400	4.00	E122.7	213
R38.1	6.350	3.850	R38.1	214
E121.18	6.950	3.500	E121.16	215
R19.1	7.000	3.350	R19.1	216
R25.1	6.350	3.450	R25.1	217
E121.5	6.400	3.400	E121.5	218
E121.7	6.400	3.300	E121.7	219
R4.2	7.000	3.550	R4.2	220
R25.2	6.100	3.450	MCAS10 L	221
R42.2	6.050	3.200	MCAS13 L	222
R37.2	7.250	3.850	BMAD45 H	223
R55.2	7.250	4.550	BMAD41 H	224
R21.2	7.250	3.450	BMAD48 H	225
R53.2	7.250	4.650	BMAD42 H	226
R41.2	7.250	4.150	BMAD47 H	227
R35.2	7.250	4.050	BMAD44 H	228
R56.2	6.100	4.850	BMAD30 H	229
R52.2	6.100	4.550	BMAD32 H	230
R38.2	6.100	3.850	BMAD36 H	231
R34.2	6.100	4.150	BMAD34 H	232
R36.2	6.100	3.950	BMAD35 H	233
R58.2	6.100	4.650	BMAD31 H	234
R51.2	7.250	4.850	BMAD43 H	235
R57.2	7.250	4.750	BMAD40 H	236
R39.2	7.250	3.950	BMAD46 H	237
R19.2	7.250	3.750	BMAD38 H	238
E121.14	7.250	3.250	BWRT40 L	239
E121.12	6.400	2.900	BWRT30 L	240

REVISION HISTORY

DATE	ECO NUMBER	REV
1/86	INIT	A

TITLE 2/4 MB MEMORY OPTION

SIZE	CODE	DOCUMENT NUMBER	REV
D	UA	5416802-1-0	A

SCALE 1/1 SHEET 4 OF 4

AUTOMATED BY VAXKPL (V1.5) — P A R T S L I S T — SHEET A1 OF A2

LINE	ITEM	TOP DOCUMENT	PART NUMBER	MIN REV	DESCRIPTION	QTY PER VAR/REV AF A2	AH A2	AP A2	BF A2	REFERENCE DESIGNATORS
1	1	D-XD-5416802-0-0	30-16601-01		CIRCUIT DRILL AND ETCH	1	1	1	1	
2	2		13-27958-01		0.22 MFD 50V +/-20% Z5U CR	-	-	-	156	C1-C156
			CONT			83	83	83	-	C1-C30,C90,C100,C119
3	3		10-24455-18		10 MFD 15V +/-10% CHI	3	3	3	3	C157-C159
4	4		12-19065-05		CONN,PWB 40POS(2X20)	2	2	2	2	J1,J2
5	5		13-23825-11		27.0 .25 W 5.0 % CHIP	-	-	-	53	R5-R12,R15-R58,R62
			CONT			30	30	30	-	R5-R12,R15-R18,R20,R22,R26-R33,
									CONT	R43-R50
6	6		13-23829-01		100.0 .25 W 1.0 % CHIP	-	-	-	9	R1-R4,R13,R14,R59-R61
			CONT			6	6	6	-	R2,R3,R14,R59-R61
7	7		19-20441-02		74F245 TRANSCEIVER,BI-DIREC	4	4	4	4	E43,E55,E65,E75
8	8		19-20572-02		74F244 BUFFER/LINE DRIVER,O	-	-	-	6	E39-E41,E121-E123
			CONT			3	3	3	-	E39-E41
9	9		19-21010-03		74F373 OCTAL TRANSPARENT LA	1	1	1	1	E44
10	10		19-21312-02		74F32 OR GATE,QUAD,2-IN	1	1	1	1	E37
11	11		19-21316-02		74F138D DECODER/DEMUX,1OF8,S	1	1	1	1	E42
12	12		19-21330-02		74F257 DATA SEL/MUX,QUAD 2T	2	2	2	2	E38,E45
13	13		21-21413-22		41256 RAM 256KX1,DYNAMIC M	-	72	-	-	E1-E36,E46-E54,E56-E64,E66-E74,
									CONT	E76-E84
14	14		21-21414-22		256KX1,DYNAMIC 150NS	-	-	-	144	E1-E36,E46-E54,E56-E64,E66-E74,
									CONT	E76-E120,E124-E159
			CONT			72	-	-	-	E1-E36,E46-E54,E56-E64,E66-E74,
									CONT	E76-E84
15	15		21-22422-22		256KX1 MOS RAM 150NS 1	-	-	72	-	E1-E36,E46-E54,E56-E64,E66-E74,
									CONT	E76-E84

1 GEN: 5416802-AA IS THE PRIMARY VARIATION OF THE 2MB MODULE.
2 GEN: 5416802-BA IS THE PRIMARY VARIATION OF THE 4 MB MODULE
3 GEN: 5416802-AH IS A MODULE USING NEC 256K PLCC DRAMS
4 GEN: 5416802-AP IS A MODULE USING MITSUBISHI 256K PLCC DRAMS

REVISION HISTORY			KPL MODULE FORMAT	SECTION A OF B	DRN: J. CUNNINGHAM	DIGITAL
ENG	ECO NUMBER	REV	SECTION/VARIATION INDEX		DATE: 31-JUL-85	
	INITIAL	A	[A] AF,AH,AP,BF [M]		CHK'D: D. DROZD	TITLE PARTS LIST
			[B] BH,BP [N]		DATE: 31-JUL-85	2 / 4 MB MEMORY OPTION
			[C] [P]		DES.ENG: G. LORD	
			[D] [Q]		DATE: 31-JUL-85	DOCUMENT NUMBER
			[E] [R]			SIZE CODE NUMBER REV
			[F] [S]		RESP.ENG.: G. LORD	K PL 5416802-0-DBP A
			[H] [T]		DATE: 27-JAN-86	
			[J] [V]		MFG.ENG: D. TAYLOR	RELEASE DATE: 04-FEB-87
			[K] [W]		DATE: 08-AUG-86	RELEASE STATUS: RELEASED
			[L] [Y]			

BASIC PART NUMBER:	ASSEMBLY NUMBER:	TOP DOCUMENT NUMBER:	FILE NAME:	EDIT #
5416802	D-UA-5416802-2-0	B-DD-5416802-0-0	GH057A.PLS	38

"THIS DRAWING AND THE SPECIFICATIONS CONTAINED HEREIN ARE CONFIDENTIAL AND PROPRIETARY. THEY ARE THE PROPERTY OF DIGITAL EQUIPMENT CORPORATION AND SHALL NOT BE REPRODUCED OR COPIED OR USED IN WHOLE OR IN PART AS THE BASIS FOR THE MANUFACTURE OR SALE OF ITEMS WITHOUT WRITTEN PERMISSION. THIS IS AN UNPUBLISHED WORK PROTECTED UNDER THE FEDERAL COPYRIGHT LAWS."

*** DOCUMENT CONVERTED TO VAX ***

LINE ITEM	TOP DOCUMENT	PART NUMBER	MIN REV	DESCRIPTION	QTY PER VAR/REV AF A2	AH A2	AP A2	BF A2	REFERENCE DESIGNATORS

5 GEN: 5416802-AH IS A MODULE USING NEC 256K PLCC DRAMS
6 GEN: 5416802-AP IS A MODULE USING MITSUBISHI 256K PLCC DRAMS
7 GEN: 5416802-AF IS A MODULE USING HITACHI 256K PLCC DRAMS.
8 GEN: 5416802-BF IS A MODULE USING HITACHI 256K DRAMS.

DIGITAL	TITLE	SIZE	CODE	DOCUMENT NUMBER	REV
	2 / 4 MB MEMORY OPTION SECTION A OF B	K	PL	5416802-0-DBP	A

AUTOMATED BY VAXKPL (V1.3)

P A R T S L I S T

SHEET 81 OF 81

LINE	ITEM	TOP DOCUMENT	PART NUMBER	MIN REV	DESCRIPTION	QTY PER 8H A2	QTY PER 8P A2	VAR/REV	REFERENCE DESIGNATORS
1	1	B-MD-5016801-0-0	50-16801-01		CIRCUIT DRILL AND ETCH	1	1		
2	2		10-27953-01		0.22 MFD 50V +/-20% Z5U CE	156	156		C1-C156
3	3		10-24455-13		10 MFD 15V +/-10% CHI	3	3		C157-C159
4	4		12-19063-05		CONN,P+S 40POS(2X20)	2	2		J1,J2
5	5		15-25625-11		27.0 .25 W 5.0 % CHIP	53	53		R5-R12,R15-R58,R62
6	6		13-25329-01		100.0 .25 W 1.0 % CHIP	9	9		R1-R4,R13,R14,R59-R61
7	7		19-20441-02		74F245 TRANSCEIVER,BI-DIREC	4	4		E43,E55,E65,E75
8	8		19-20572-02		74F244 BUFFER/LINE DRIVER,O	6	6		E39-E41,E121-E123
9	9		19-21010-03		74F373 OCTAL TRANSPARENT LA	1	1		E44
10	10		19-21312-02		74F32 OR GATE,QUAD,2-IN	1	1		E37
11	11		19-21316-02		74F138D DECODER/DEMUX,1OF8,S	1	1		E42
12	12		19-21330-02		74F257 DATA SEL/MUX,QUAD 2T	2	2		E38,E45
13	13		21-21413-22		41256 RAM 256KX1,DYNAMIC M	144	-		E1-E36,E46-E54,E56-E64,E66-E74,
14	14		21-21414-22		256KX1,DYNAMIC 150NS	-	-	CONT	E76-E120,E124-E159
15	15		21-22422-22		256KX1 MOS RAM 150NS 1	-	144		E1-E36,E46-E54,E56-E64,E66-E74,
								CONT	E76-E120,E124-E159

1 GEN: 5416802-AA IS THE PRIMARY VARIATION OF THE 2MB MODULE.
2 GEN: 5416802-BA IS THE PRIMARY VARIATION OF THE 4 MB MODULE
3 GEN: 5416802-AH IS A MODULE USING NEC 256K PLCC DRAMS
4 GEN: 5416802-AP IS A MODULE USING MITSUBISHI 256K PLCC DRAMS
5 GEN: 5416802-BH IS A MODULE USING NEC 256K PLCC DRAMS
6 GEN: 5416802-BP IS A MODULE USING MITSUBISHI 256K PLCC DRAMS
7 GEN: 5416802-AF IS A MODULE USING HITACHI 256K PLCC DRAMS.
8 GEN: 5416802-BF IS A MODULE USING HITACHI 256K DRAMS.

REVISION HISTORY			KPL MODULE FORMAT	SECTION B OF B			
ENG	ECO NUMBER	REV	SECTION/VARIATION INDEX		DRN: J. CUNNINGHAM DATE: 31-JUL-85	D I G I T A L	
	INITIAL	A	[A] AF,AH,AP,BF [M] [B] BH,BP [N] [C] [P] [D] [Q] [E] [R] [F] [S] [H] [T] [J] [V] [K] [W] [L] [Y]		CHK'D: D. DROZD DATE: 31-JUL-85 DES.ENG: G. LORD DATE: 31-JUL-85 RESP.ENG.: G. LORD DATE: 27-JAN-86 MFG.ENG: D. TAYLOR DATE: 08-AUG-86	TITLE PARTS LIST 2 / 4 MB MEMORY OPTION DOCUMENT NUMBER SIZE: K CODE: PL NUMBER: 5416802-0-DBP REV: A RELEASE DATE: 04-FEB-87 RELEASE STATUS: RELEASED	
			BASIC PART NUMBER: 5416802	ASSEMBLY NUMBER: D-UA-5416802-2-0	TOP DOCUMENT NUMBER: B-DD-5416802-0-0	FILE NAME: GH057A.PLS	EDIT #: 38

"THIS DRAWING AND THE SPECIFICATIONS CONTAINED HEREIN ARE CONFIDENTIAL AND PROPRIETARY. THEY ARE THE PROPERTY OF DIGITAL EQUIPMENT CORPORATION AND SHALL NOT BE REPRODUCED OR COPIED OR USED IN WHOLE OR IN PART AS THE BASIS FOR THE MANUFACTURE OR SALE OF ITEMS WITHOUT WRITTEN PERMISSION. THIS IS AN UNPUBLISHED WORK PROTECTED UNDER THE FEDERAL COPYRIGHT LAWS."

*** DOCUMENT CONVERTED TO VAX ***

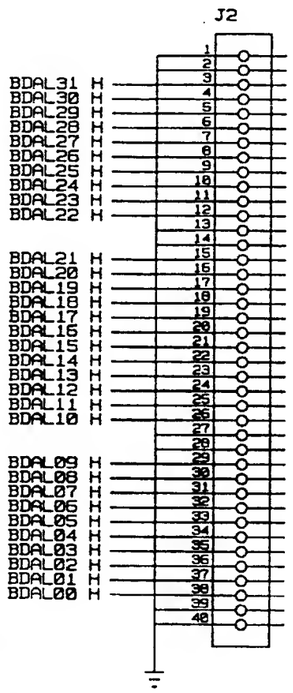

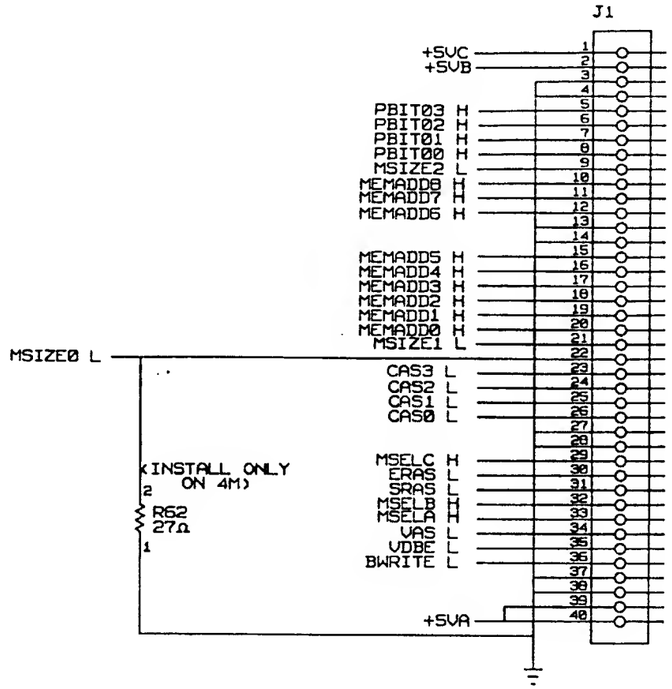

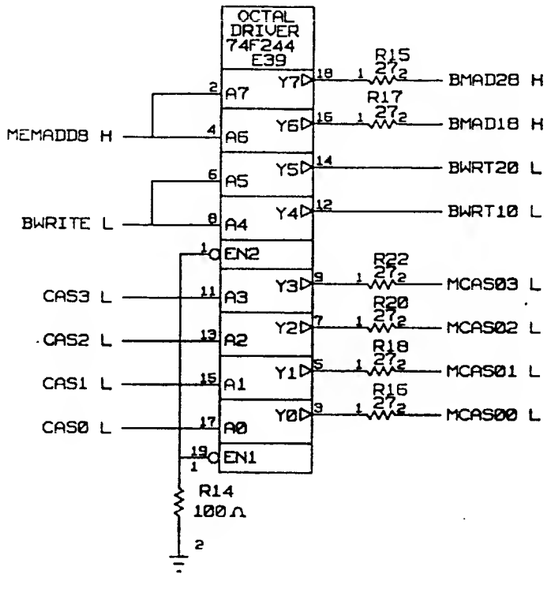

NOTE: ALL I.C.'S OTHER THAN MEMORY CHIPS VCC IS CONNECTED TO +5VC

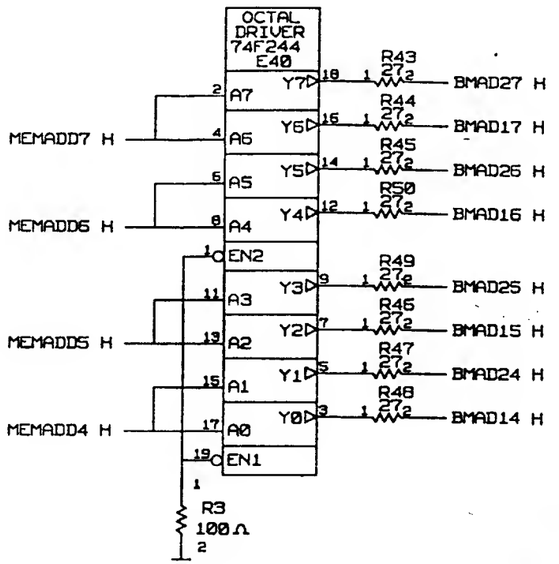

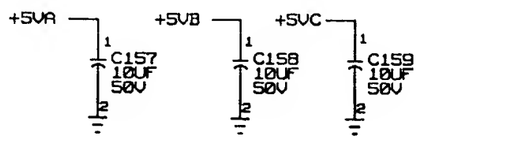

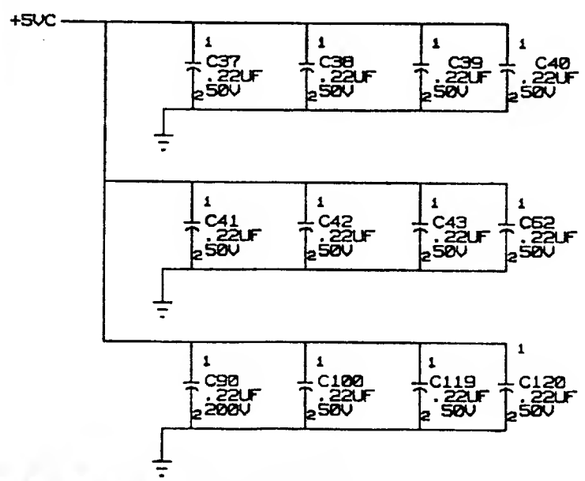

J1 PIN9 MS2 MSIZE2	J1 PIN21 MS1 MSIZE1	J1 PIN22 MS0 MSIZE0		
0	0	0	=	NO MEM
0	0	1	=	1MB
0	1	0	=	2MB
0	1	1	=	4MB
1	0	0		RESERVED
1	0	1		
1	1	0		
1	1	1		

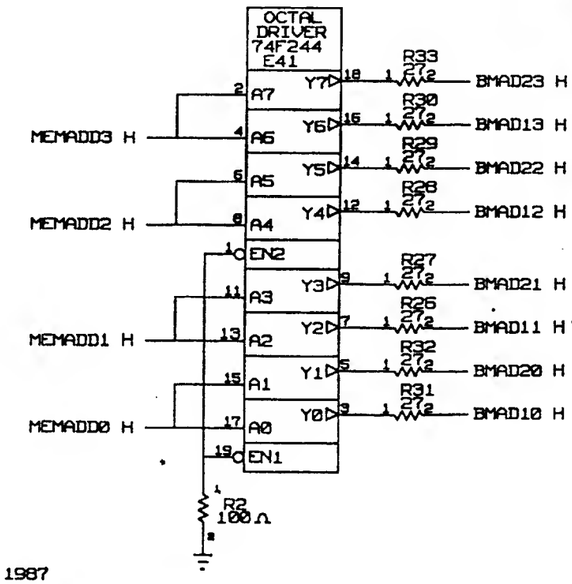

DRAWING
TITLE=MEM2/4
ABBREV=MEM2
LAST_MODIFIED=Mon Jan 26 08:27:34 1987

THIS MANUAL AND SPECIFICATIONS, ARE THE PROPERTY OF DIGITAL EQUIPMENT CORPORATION AND SHALL NOT BE REPRODUCED OR COPIED OR USED IN WHOLE OR IN PART AS THE BASIS FOR MANUFACTURE OR SALE OF ITEMS WITHOUT WRITTEN PERMISSION. COPYRIGHT © 1986, DIGITAL EQUIPMENT CORPORATION

REVISION		
CHK	CHANGE NO.	REV

DRN K. GLEEZEN	DATE 8/7/86	ENG G. LORD	DATE 8/7/86
CHK P. SCANTLEBURY	DATE 8/7/86	BOARD LOCATION	
USED ON FIRST USED ON OPTION/MODEL		SHEET 1 OF 11	
		TOP DOCUMENT NUMBER K-DD-5416802-0-0	

TITLE: 2/4 MBYTE MEMORY OPTION

SIZE	CODE	NUMBER	REV.
B	CS	5416802-0-1	A

THIS DRAWING AND SPECIFICATIONS, HEREIN, ARE THE PROPERTY OF DIGITAL EQUIPMENT CORPORATION AND SHALL NOT BE REPRODUCED OR COPIED OR USED IN WHOLE OR IN PART AS THE BASIS FOR THE MANUFACTURE OR SALE OF ITEMS WITHOUT WRITTEN PERMISSION. COPYRIGHT © 1986 DIGITAL EQUIPMENT CORPORATION

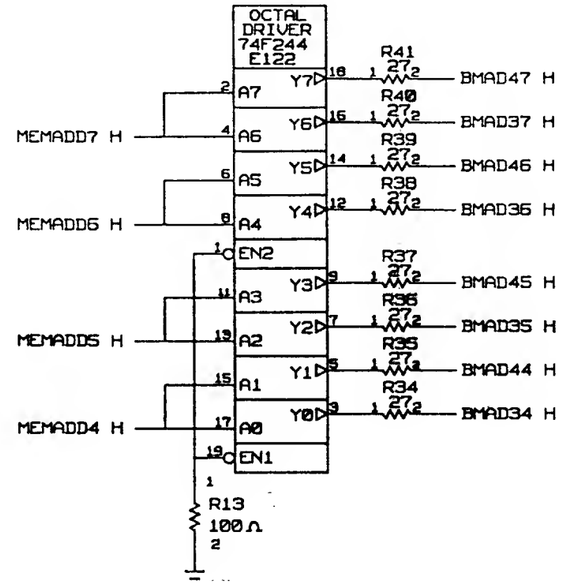

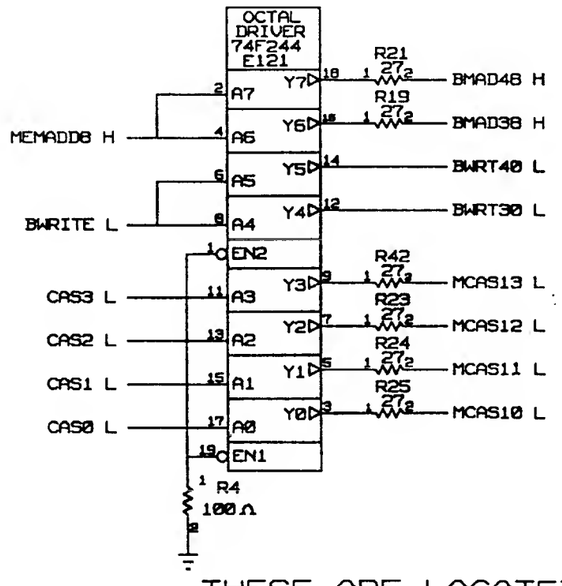

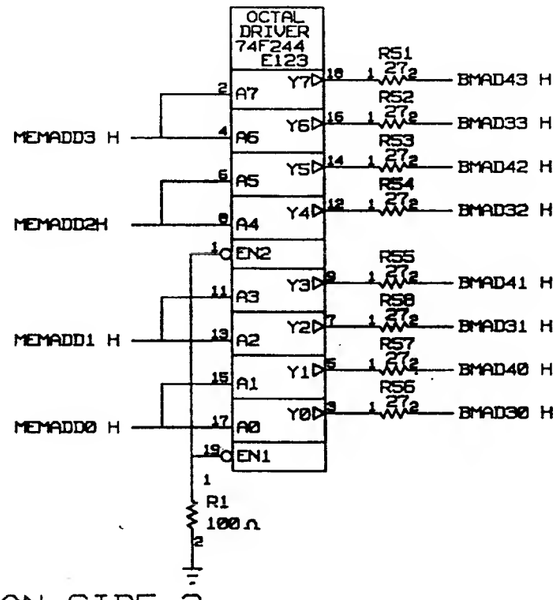

THESE ARE LOCATED ON SIDE 2

ENG. G. LORD	DATE 8/7/86	TITLE: 2/4 MBYTE MEMORY OPTION	
BOARD LOCATION			
SIZE	SHEET 2 OF 11		
TOP DOCUMENT NUMBER K-DD-5416802-0-0		SIZE B / CODE CS / NUMBER 5416802-0-1	REV. A

5416802-0-1 B CS B A

THIS DRAWING AND SPECIFICATIONS, WHICH ARE THE PROPERTY OF DIGITAL EQUIPMENT CORPORATION SHALL NOT BE REPRODUCED OR COPIED OR USED IN WHOLE OR IN PART AS THE BASIS FOR THE MANUFACTURE OR SALE OF ITEMS WITHOUT WRITTEN PERMISSION. COPYRIGHT © 1986 DIGITAL EQUIPMENT CORPORATION

8 BIT LATCH 74F373 E44
R7 R6 R5 R4 R3 R2 R1 R0
D7 D5 D4 D3 D2 D1 D0
ROLD ENO
MSELC H
MSELB H
MSELA H
VAS L
SRAS L
ERAS L
R61 100Ω

DECODER 74F138 E42
7F 6F 5F 4F 3F 2F 1F 0F
4S 2S 1S
E3 E2 E1

4X2 MUX 74F257 E38
1D-D 0D-D
1D-C 0D-C
1D-B 0D-B
1D-A 0D-A
1S EN
FDD FCD FBD FAD
R9 R12 R7 R5
MRAS21 L MRAS11 L MRAS31 L MRAS41 L
R60 100Ω

4X2 MUX 74F257 E45
1D-D 0D-D
1D-C 0D-C
1D-B 0D-B
1D-A 0D-A
1S EN
FDD FCD FBD FAD
R8 R6 R10 R11
MRAS20 L MRAS10 L MRAS30 L MRAS40 L
R59 100Ω

74F32 E37
SRAS L
ERAS L

OCTAL BUS TRNCVR 74F245 E55
B7 B6 B5 B4 B3 B2 B1 B0
A7 A6 A5 A4 A3 A2 A1 A0
DIR EN
MDAL31 H MDAL30 H MDAL29 H MDAL28 H MDAL27 H MDAL26 H MDAL25 H MDAL24 H
BDAL31 H BDAL30 H BDAL29 H BDAL28 H BDAL27 H BDAL26 H BDAL25 H BDAL24 H

OCTAL BUS TRNCVR 74F245 E75
MDAL15 H MDAL14 H MDAL13 H MDAL12 H MDAL11 H MDAL10 H MDAL09 H MDAL08 H
BDAL15 H BDAL14 H BDAL13 H BDAL12 H BDAL11 H BDAL10 H BDAL09 H BDAL08 H

OCTAL BUS TRNCVR 74F245 E43
MDAL23 H MDAL22 H MDAL21 H MDAL20 H MDAL19 H MDAL18 H MDAL17 H MDAL16 H
BDAL23 H BDAL22 H BDAL21 H BDAL20 H BDAL19 H BDAL18 H BDAL17 H BDAL16 H

OCTAL BUS TRNCVR 74F245 E65
MDAL07 H MDAL06 H MDAL05 H MDAL04 H MDAL03 H MDAL02 H MDAL01 H MDAL00 H
BDAL07 H BDAL06 H BDAL05 H BDAL04 H BDAL03 H BDAL02 H BDAL01 H BDAL00 H

BWRITE L
74F32 E37
ERAS L
VDBE L

ENG. G.LORD	DATE 8/7/86	TITLE: 2/4 MBYTE MEMORY OPTION	
BOARD LOCATION			
SHEET 3 OF 11			
TOP DOCUMENT NUMBER K-DD-5416802-0-0		SIZE B / CODE CS / NUMBER 5416802-0-1	REV. A

B | CS | 5416802-0-1 | A

THIS DRAWING AND SPECIFICATIONS, AS AN UNPUBLISHED WORK, ARE THE PROPERTY OF DIGITAL EQUIPMENT CORPORATION AND SHALL NOT BE REPRODUCED OR COPIED OR USED IN WHOLE OR IN PART AS THE BASIS FOR ANY MANUFACTURE OR SALE OF ITEMS WITHOUT WRITTEN PERMISSION. COPYRIGHT © 1986 DIGITAL EQUIPMENT CORPORATION

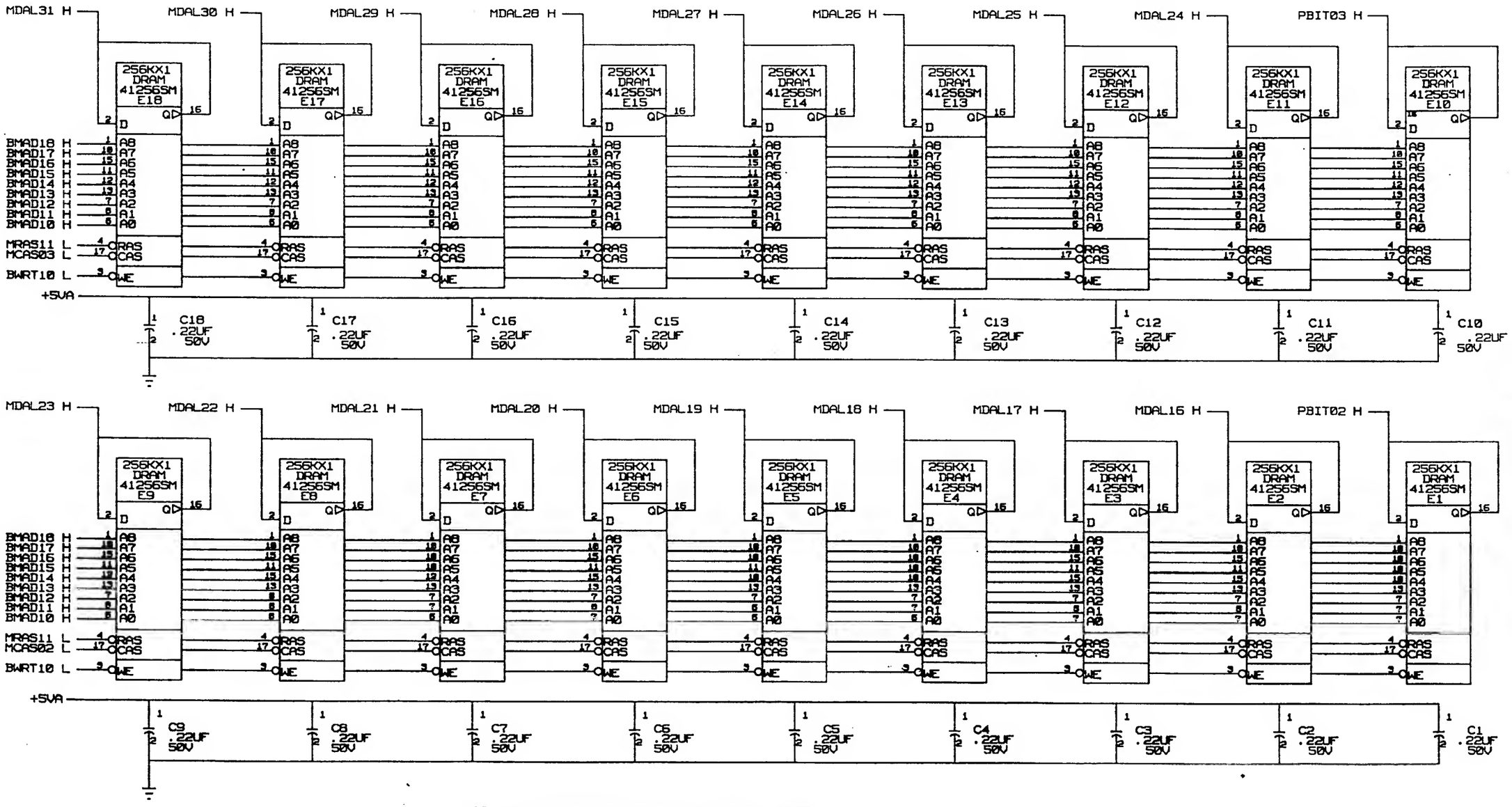

NOTE: ALL MEMORY CHIPS ON THIS PAGE
VCC IS CONNECTED TO +5VA

BANK 1 BITS <31:16>

DWN: G. LORD	DATE: 8/8/86	TITLE: 2/4 MBYTE MEMORY OPTION	
ACCESS LOCATION:	SHEET 4 OF 11		
TOP DOCUMENT NUMBER: K-DD-5416802-0-0		SIZE: B / CODE: CS / NUMBER: 5416802-0-1	REV: A

5416802-0-1 A

THIS DRAWING AND SPECIFICATIONS, MINERAL ARE THE PROPERTY OF DIGITAL EQUIPMENT CORPORATION AND SHALL NOT BE REPRODUCED OR COPIED OR USED IN WHOLE OR IN PART AS THE BASIS FOR THE MANUFACTURE OR SALE OF ITEMS WITHOUT WRITTEN PERMISSION. COPYRIGHT © 1986, DIGITAL EQUIPMENT CORPORATION

MDAL15 H — MDAL14 H — MDAL13 H — MDAL12 H — MDAL11 H — MDAL10 H — MDAL09 H — MDAL08 H — PBIT01 H

256KX1 DRAM 41256SM E36 — E35 — E34 — E33 — E32 — E31 — E30 — E29 — E28

BMAD18 H
BMAD17 H
BMAD16 H
BMAD15 H
BMAD14 H
BMAD13 H
BMAD12 H
BMAD11 H
BMAD10 H
MRAS10 L
MCAS01 L
BWRT10 L

+5VA

C36 .22UF 50V — C35 .22UF 50V — C34 .22UF 50V — C33 .22UF 50V — C32 .22UF 50V — C31 .22UF 50V — C30 .22UF 50V — C29 .22UF 50V — C28 .22UF 50V

MDAL07 H — MDAL06 H — MDAL05 H — MDAL04 H — MDAL03 H — MDAL02 H — MDAL01 H — MDAL00 H — PBIT00 H

256KX1 DRAM 41256SM E27 — E26 — E25 — E24 — E23 — E22 — E21 — E20 — E19

BMAD18 H
BMAD17 H
BMAD16 H
BMAD15 H
BMAD14 H
BMAD13 H
BMAD12 H
BMAD11 H
BMAD10 H
MRAS00 L
MCAS00 L
BWRT10 L

+5VA

C27 .22UF 50V — C26 .22UF 50V — C25 .22UF 50V — C24 .22UF 50V — C23 .22UF 50V — C22 .22UF 50V — C21 .22UF 50V — C20 .22UF 50V — C19 .22UF 50V

NOTE: ALL MEMORY CHIPS ON THIS PAGE
VCC IS CONNECTED TO +5VA

BANK 1 BITS <15:00>

ENG. G. LORD	DATE 8/8/86	TITLE: 2/4 MBYTE MEMORY OPTION	
SHEET 5 OF 11			
TOP DOCUMENT NUMBER K-DD-5416802-0-0		SIZE B / CODE CS / NUMBER 5416802-0-1	REV. A

THIS DRAWING AND SPECIFICATIONS, AS AN UNPUBLISHED WORK, ARE THE PROPERTY OF DIGITAL EQUIPMENT CORPORATION AND SHALL NOT BE REPRODUCED OR COPIED OR USED IN WHOLE OR IN PART AS THE BASIS FOR THE MANUFACTURE OR SALE OF ITEMS WITHOUT WRITTEN PERMISSION. COPYRIGHT © 1986, DIGITAL EQUIPMENT CORPORATION

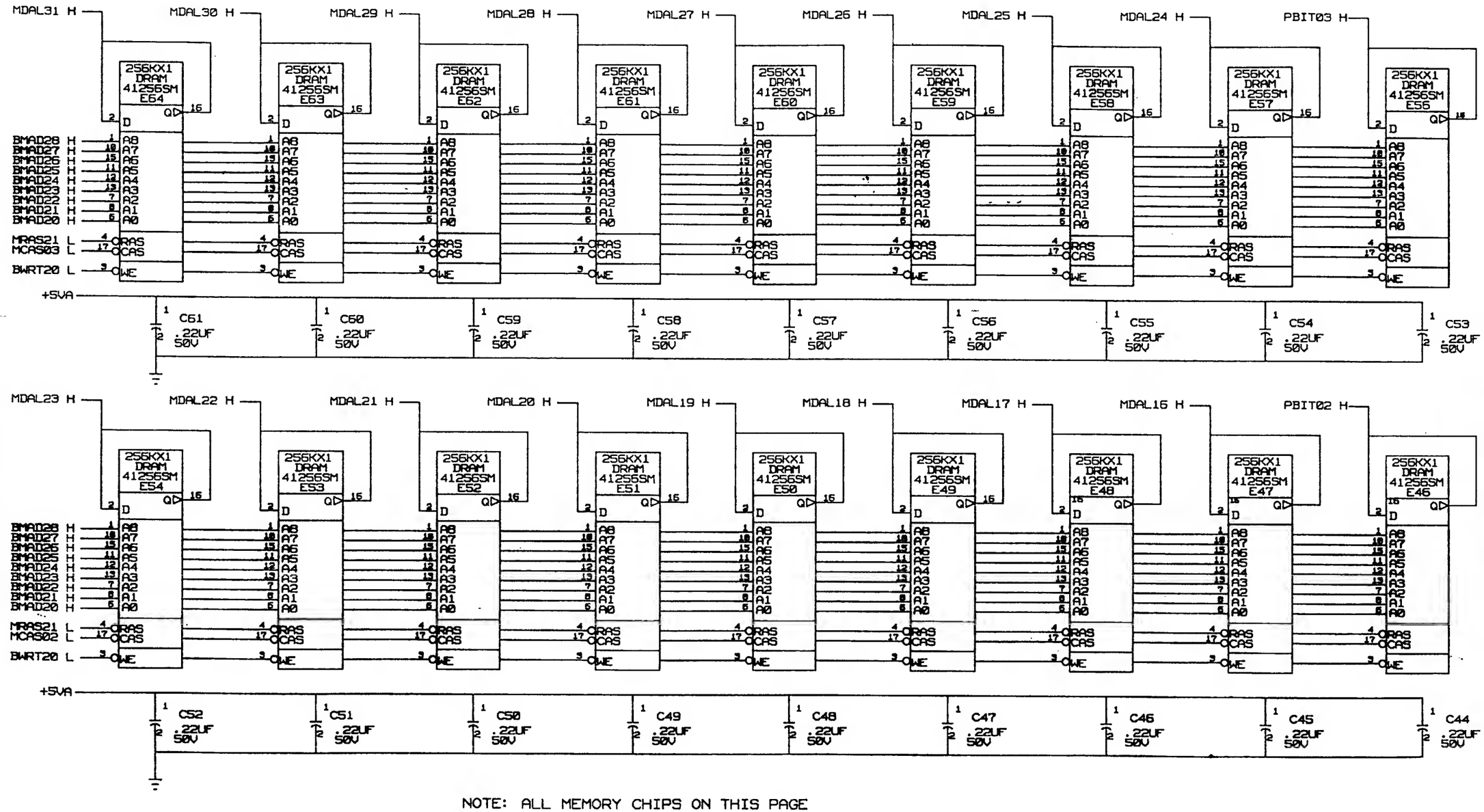

NOTE: ALL MEMORY CHIPS ON THIS PAGE
VCC IS CONNECTED TO +5VA

BANK 2 BITS <31:16>

DES. G. LORD	DATE 8/8/86	TITLE: 2/4 MBYTE MEMORY OPTION	
DRAWING LOCATION	SHEET 5 OF 11		
TOP DOCUMENT NUMBER K-DD-5416802-0-0		SIZE B / CODE CS / NUMBER 5416802-0-1	REV. A

THIS DRAWING AND SPECIFICATIONS, MEDIUM, ARE THE PROPERTY OF DIGITAL EQUIPMENT CORPORATION AND SHALL NOT BE REPRODUCED OR COPIED OR USED IN WHOLE OR IN PART AS THE BASIS FOR THE MANUFACTURE OR SALE OF ITEMS WITHOUT WRITTEN PERMISSION. COPYRIGHT © 1986 DIGITAL EQUIPMENT CORPORATION

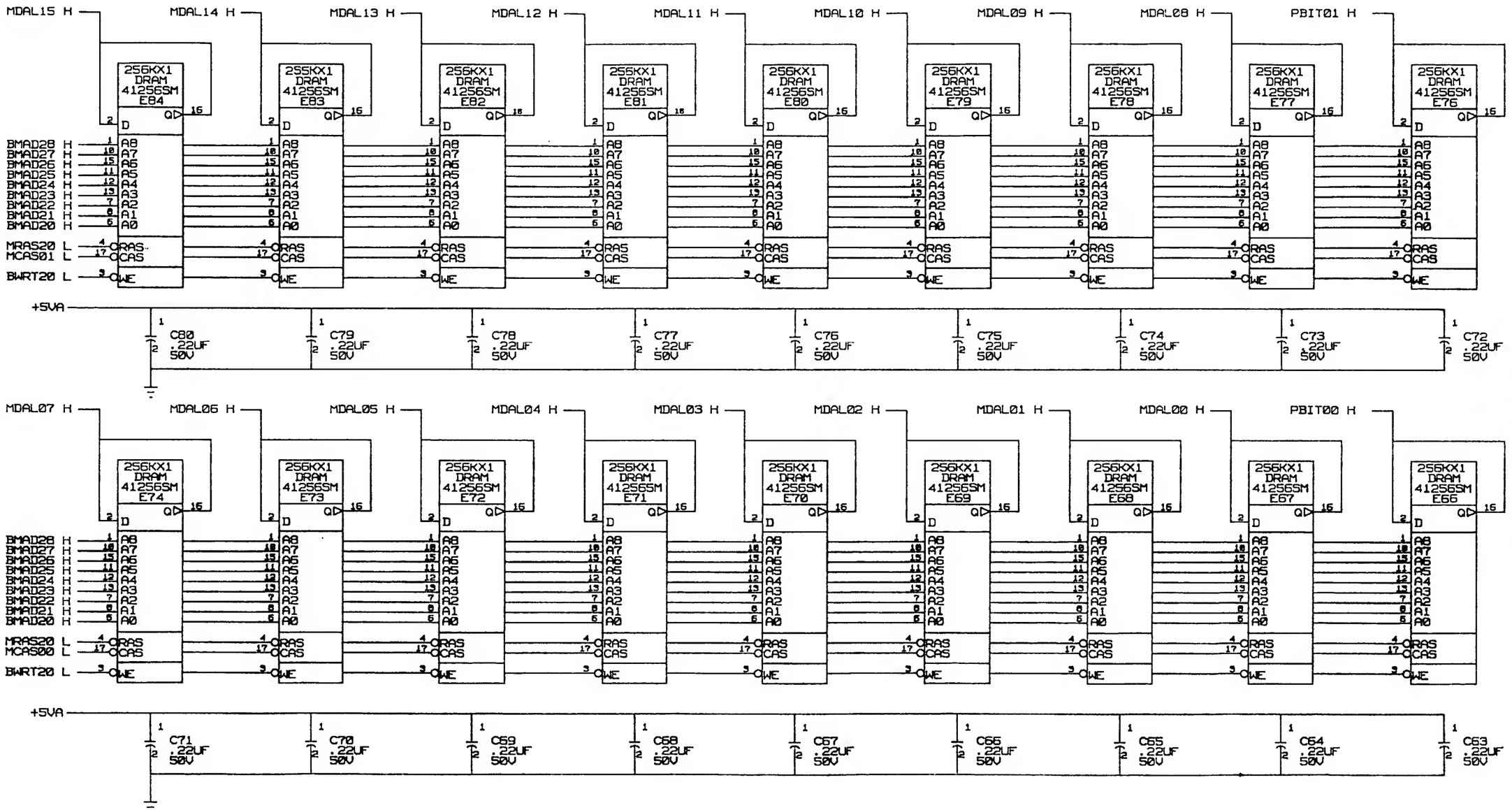

NOTE: ALL MEMORY CHIPS ON THIS PAGE
VCC IS CONNECTED TO +5VA

BANK 2 BITS <15:00>

ENG. G. LORD	DATE 8/8/86
BOARD LOCATION	
SHEET 7 OF 11	
TOP DOCUMENT NUMBER K-DD-5416802-0-0	

TITLE: 2/4 MBYTE MEMORY OPTION

SIZE	CODE	NUMBER	REV.
B	CS	5416802-0-1	A

THIS DRAWING AND SPECIFICATIONS, HEREON, ARE THE PROPERTY OF DIGITAL EQUIPMENT CORPORATION AND SHALL NOT BE REPRODUCED OR COPIED OR USED IN WHOLE OR IN PART AS THE BASIS FOR THE MANUFACTURE OR SALE OF ITEMS WITHOUT WRITTEN PERMISSION. COPYRIGHT © 1985 DIGITAL EQUIPMENT CORPORATION

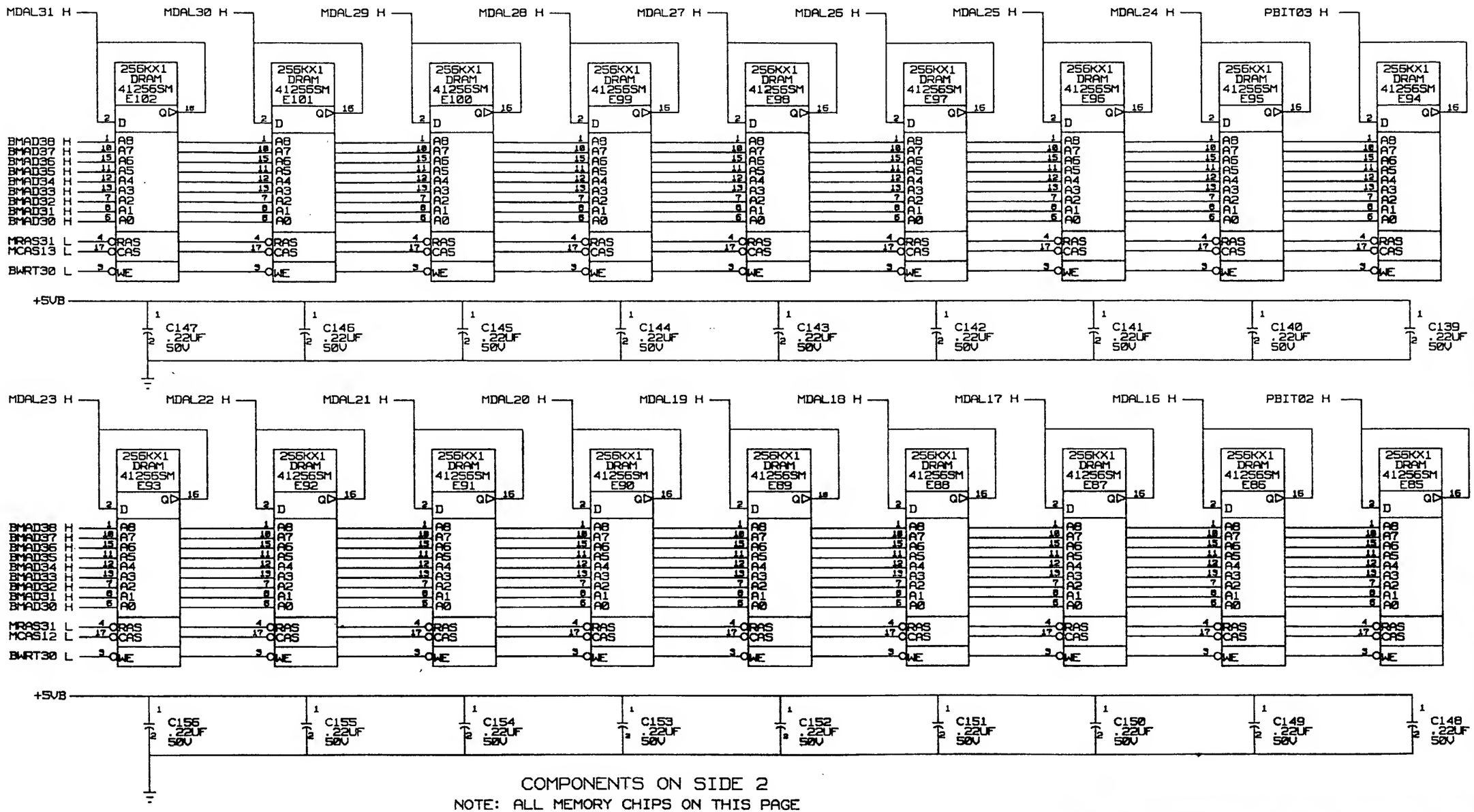

COMPONENTS ON SIDE 2

NOTE: ALL MEMORY CHIPS ON THIS PAGE
VCC IS CONNECTED TO +5VB

BANK 3 BITS <31:16>

ENG. G.LORD	DATE 8/8/86	TITLE: 2/4 MBYTE MEMORY OPTION	
BOARD LOCATION			
SHEET 8 OF 11			
TOP DOCUMENT NUMBER K-DD-5416802-0-0	SIZE B / CODE CS	NUMBER 5416802-0-1	REV. A

5416802-0-1 A

THIS DRAWING AND SPECIFICATIONS, MASKIN ARE THE PROPERTY OF DIGITAL EQUIPMENT CORPORATION AND SHALL NOT BE REPRODUCED OR COPIED OR USED IN WHOLE OR IN PART AS THE BASIS FOR THE MANUFACTURE OR SALE OF ITEMS WITHOUT WRITTEN PERMISSION. COPYRIGHT © 1985, DIGITAL EQUIPMENT CORPORATION

MDAL15 H — MDAL14 H — MDAL13 H — MDAL12 H — MDAL11 H — MDAL10 H — MDAL09 H — MDAL08 H — PBIT01 H

256KX1 DRAM 41256SM E120 — 256KX1 DRAM 41256SM E119 — 256KX1 DRAM 41256SM E118 — 256KX1 DRAM 41256SM E117 — 256KX1 DRAM 41256SM E116 — 256KX1 DRAM 41256SM E115 — 256KX1 DRAM 41256SM E114 — 256KX1 DRAM 41256SM E113 — 256KX1 DRAM 41256SM E112

BMAD38 H
BMAD37 H
BMAD36 H
BMAD35 H
BMAD34 H
BMAD33 H
BMAD32 H
BMAD31 H
BMAD30 H

MRAS30 L
MCAS11 L

BWRT30 L

+5VB

C129 .22UF 50V — C128 .22UF 50V — C127 .22UF 50V — C126 .22UF 50V — C125 .22UF 50V — C124 .22UF 50V — C123 .22UF 50V — C122 .22UF 50V — C121 .22UF 50V

MDAL07 H — MDAL06 H — MDAL05 H — MDAL04 H — MDAL03 H — MDAL02 H — MDAL01 H — MDAL00 H — PBIT00 H

256KX1 DRAM 41256SM E111 — 256KX1 DRAM 41256SM E110 — 256KX1 DRAM 41256SM E109 — 256KX1 DRAM 41256SM E108 — 256KX1 DRAM 41256SM E107 — 256KX1 DRAM 41256SM E106 — 256KX1 DRAM 41256SM E105 — 256KX1 DRAM 41256SM E104 — 256KX1 DRAM 41256SM E103

BMAD38 H
BMAD37 H
BMAD36 H
BMAD35 H
BMAD34 H
BMAD33 H
BMAD32 H
BMAD31 H
BMAD30 H

MRAS10 L
MCAS10 L

BWRT30 L

+5VB

C138 .22UF 50V — C137 .22UF 50V — C136 .22UF 50V — C135 .22UF 50V — C134 .22UF 50V — C133 .22UF 50V — C132 .22UF 50V — C131 .22UF 50V — C130 .22UF 50V

COMPONENTS NO SIDE 2

NOTE: ALL MEMORY CHIPS ON THIS PAGE
VCC IS CONNECTED TO +5VB

BANK 3 BITS <15:00>

ENG. G. LORD	DATE 8/8/86	TITLE: 2/4 MBYTE MEMORY OPTION	
BOARD LOCATION			
SHEET 9 OF 11			
TOP DOCUMENT NUMBER K-DD-5416802-0-0		SIZE B / CODE CS / NUMBER 5416802-0-1	REV. A

THIS DRAWING AND SPECIFICATIONS, HEREIN, ARE THE PROPERTY OF DIGITAL EQUIPMENT CORPORATION AND SHALL NOT BE REPRODUCED OR COPIED OR USED IN WHOLE OR IN PART AS THE BASIS FOR THE MANUFACTURE OR SALE OF ITEMS WITHOUT WRITTEN PERMISSION. COPYRIGHT © 1986 DIGITAL EQUIPMENT CORPORATION

MDAL31 H MDAL30 H MDAL29 H MDAL28 H MDAL27 H MDAL26 H MDAL25 H MDAL24 H PBIT03 H

256KX1 DRAM 412565M E141 · E140 · E139 · E138 · E137 · E136 · E135 · E134 · E133

BMAD48 H
BMAD47 H
BMAD46 H
BMAD45 H
BMAD44 H
BMAD43 H
BMAD42 H
BMAD41 H
BMAD40 H
MRAS41 L
MCAS13 L
BWRT40 L

+5VB

C109 .22UF 50V · C108 .22UF 50V · C107 .22UF 50V · C106 .22UF 50V · C105 .22UF 50V · C104 .22UF 50V · C103 .22UF 50V · C102 .22UF 50V · C101 .22UF 50V

MDAL23 H MDAL22 H MDAL21 H MDAL20 H MDAL19 H MDAL18 H MDAL17 H MDAL16 H PBIT02 H

256KX1 DRAM 412565M E132 · E131 · E130 · E129 · E128 · E127 · E126 · E125 · E124

BMAD48 H
BMAD47 H
BMAD46 H
BMAD45 H
BMAD44 H
BMAD43 H
BMAD42 H
BMAD41 H
BMAD40 H
MRAS41 L
MCAS12 L
BWRT40 L

+5VB

C118 .22UF 50V · C117 .22UF 50V · C116 .22UF 50V · C115 .22UF 50V · C114 .22UF 50V · C113 .22UF 50V · C112 .22UF 50V · C111 .22UF 50V · C110 .22UF 50V

COMPONENTS ON SIDE 2

NOTE: ALL MEMORY CHIPS ON THIS PAGE
VCC IS CONNECTED TO +5VB

BANK 4 BITS <31:16>

ENG. G. LORD	DATE 8/8/86	TITLE: 2/4 MBYTE MEMORY OPTION	
DRAWN LOCATION			
SHEET 10 OF 11			
TOP DOCUMENT NUMBER K-DD-5416802-0-0		SIZE B / CODE CS / NUMBER 5416802-0-1	REV. A

5416802-0-1

THIS DRAWING AND SPECIFICATIONS, AS AN UNPUBLISHED WORK, ARE THE PROPERTY OF DIGITAL EQUIPMENT CORPORATION AND SHALL NOT BE REPRODUCED OR COPIED OR USED IN WHOLE OR IN PART AS THE BASIS FOR THE MANUFACTURE OR SALE OF ITEMS WITHOUT WRITTEN PERMISSION. COPYRIGHT © 1986, DIGITAL EQUIPMENT CORPORATION

MDAL15 H — MDAL14 H — MDAL13 H — MDAL12 H — MDAL11 H — MDAL10 H — MDAL09 H — MDAL08 H — PBIT01 H

256KX1 DRAM 412565SM E159 / E158 / E157 / E156 / E155 / E154 / E153 / E152 / E151

BMAD48 H
BMAD47 H
BMAD46 H
BMAD45 H
BMAD44 H
BMAD43 H
BMAD42 H
BMAD41 H
BMAD40 H
MRAS40 L
MCAS11 L
BWRT40 L

+5VB

C89 .22UF 50V — C88 .22UF 50V — C87 .22UF 50V — C86 .22UF 50V — C85 .22UF 50V — C84 .22UF 50V — C83 .22UF 50V — C82 .22UF 50V — C81 .22UF 50V

MDAL07 H — MDAL06 H — MDAL05 H — MDAL04 H — MDAL03 H — MDAL02 H — MDAL01 H — MDAL00 H — PBIT00 H

256KX1 DRAM 412565SM E150 / E149 / E148 / E147 / E146 / E145 / E144 / E143 / E142

BMAD48 H
BMAD47 H
BMAD46 H
BMAD45 H
BMAD44 H
BMAD43 H
BMAD42 H
BMAD41 H
BMAD40 H
MRAS10 L
MCAS10 L
BWRT40 L

+5VB

C99 .22UF 50V — C98 .22UF 50V — C97 .22UF 50V — C96 .22UF 50V — C95 .22UF 50V — C94 .22UF 50V — C93 .22UF 50V — C92 .22UF 50V — C91 .22UF 50V

COMPONENTS ON SIDE 2

NOTE: ALL MEMORY CHIPS ON THIS PAGE
VCC IS CONNECTED TO +5VB

BANK 4 BITS <15:00>

ENG. G. LORD	DATE 8/8/86	TITLE: 2/4 MBYTE MEMORY OPTION	
BOARD LOCATION			
SHEET 11 OF 11			
TOP DOCUMENT NUMBER K-DD-5416802-0-0		SIZE B / CODE CS / NUMBER 5416802-0-1	REV. A